Sub-Module Differential Power Processing for Photovoltaic Applications

Shibin Qin Robert C.N. Pilawa-Podgurski

Department of Electrical and Computer Engineering
University of Illinois at Urbana-Champaign

2013.04.01

Outline

Outline

PV Module Mismatch Problem

- PV modules are connected in series to increase voltage
- Series connected PV modules suffers from current mismatch
  - Partial shading
  - Manufacturing variability
  - Non-uniform ageing characteristics

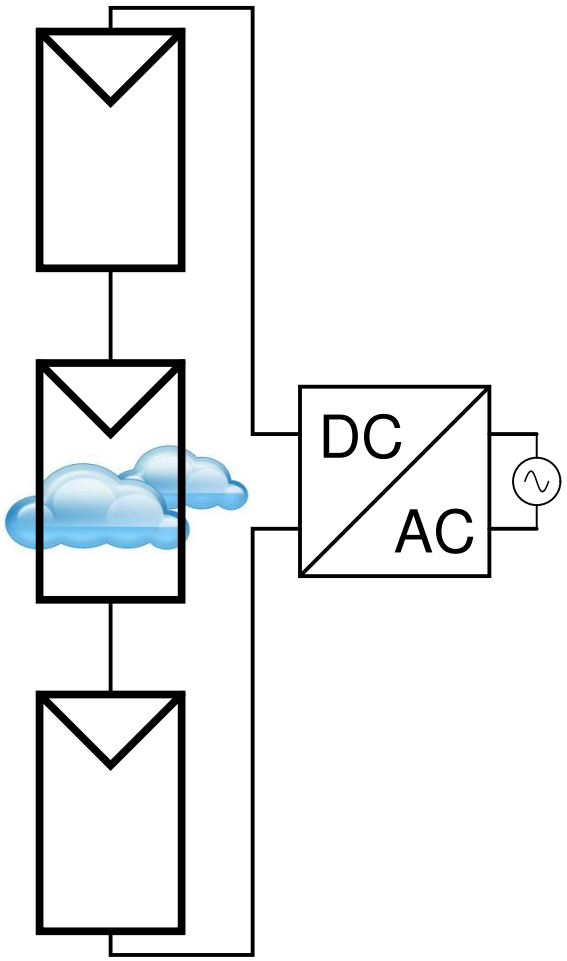

Maximum Power Point Tracking (MPPT)

Conventional Solutions

Two major conventional solutions for MPPT:

- DC Optimizer
- Micro-inverter

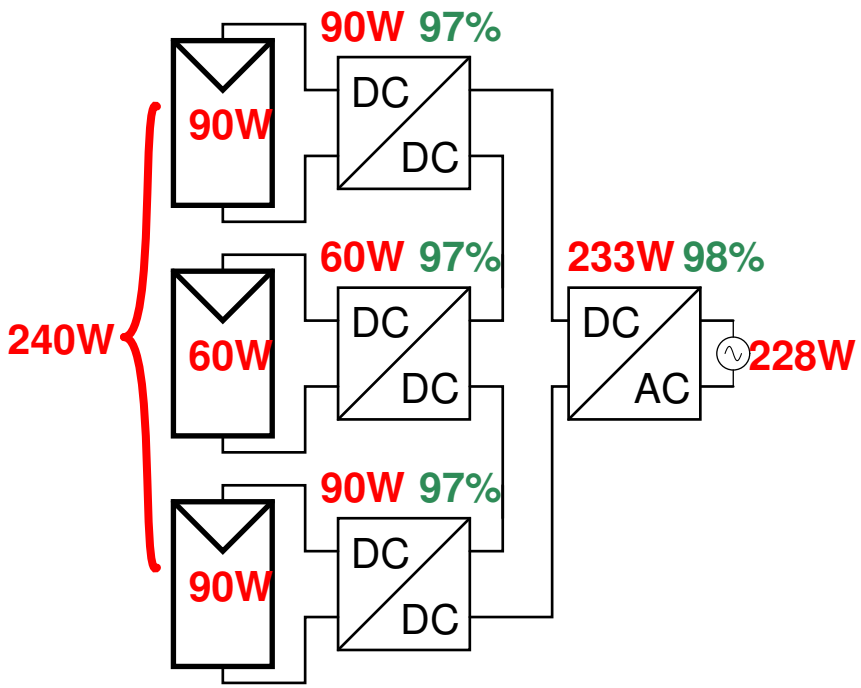

Overall Efficiency: 95%

(a) DC optimizer

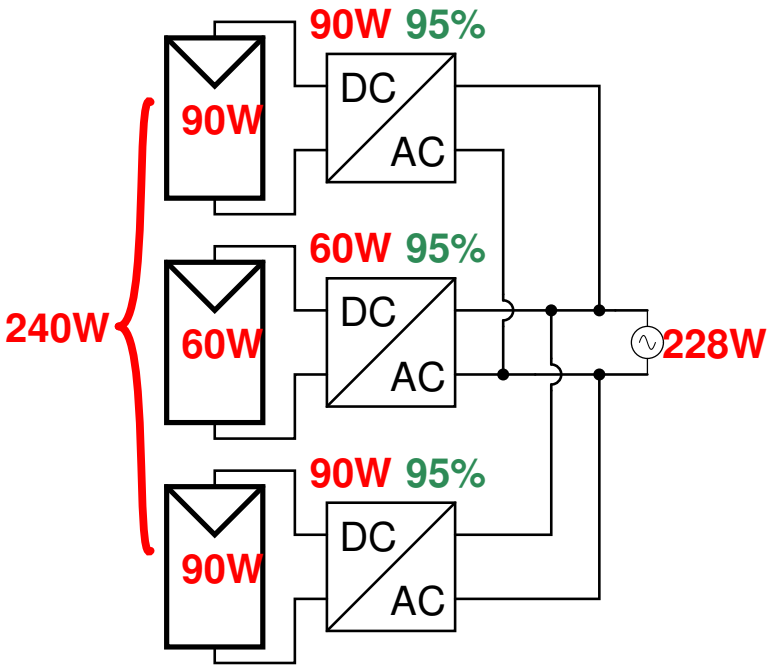

Overall Efficiency: 95%

(b) Micro-inverter

Differential Power Processing MPPT

An Alternative Solution

- The bulk power goes directly to the central converter
- Each converter processes only the power difference
- Avoid intermediate conversion of the bulk power

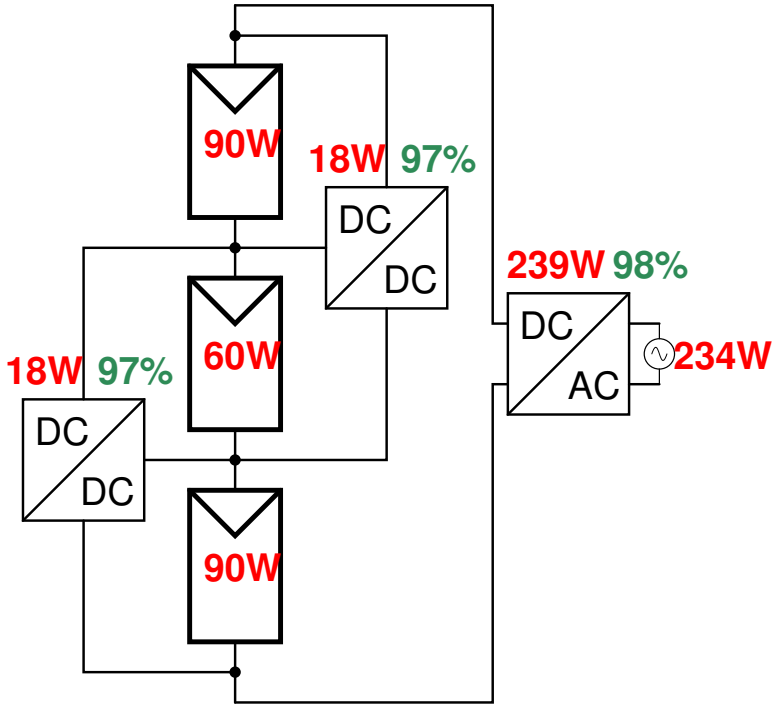

Overall Efficiency: 97.5%

Sub-module Level MPPT

Increasing Tracking Granularity

- Each PV module typically consists of three sub-modules
- PV module power output impaired by sub-module mismatch

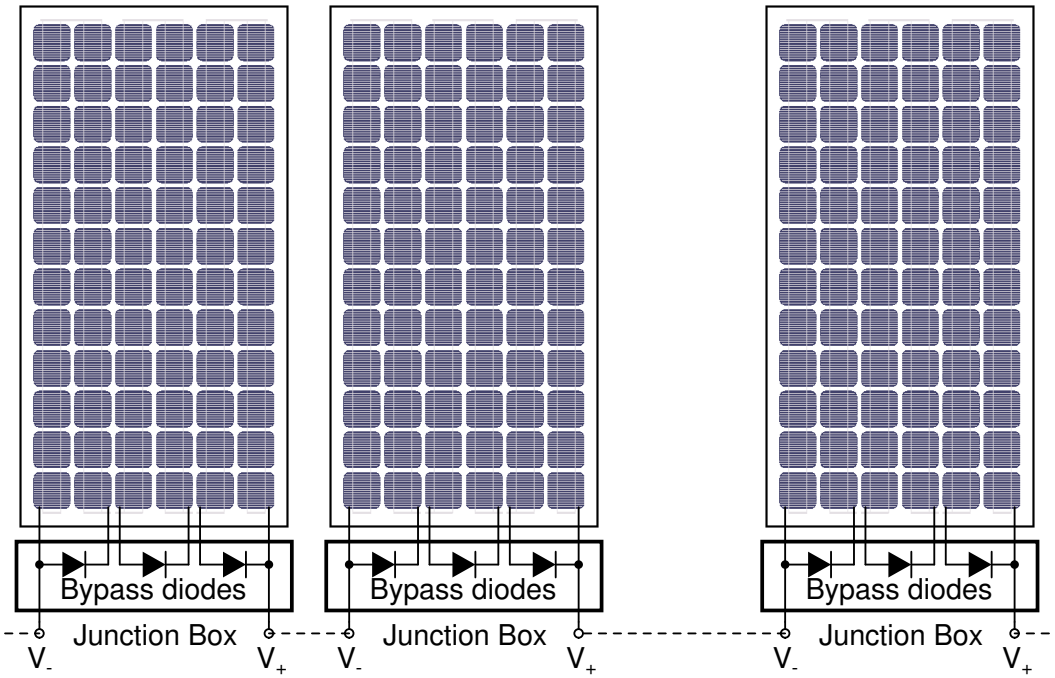

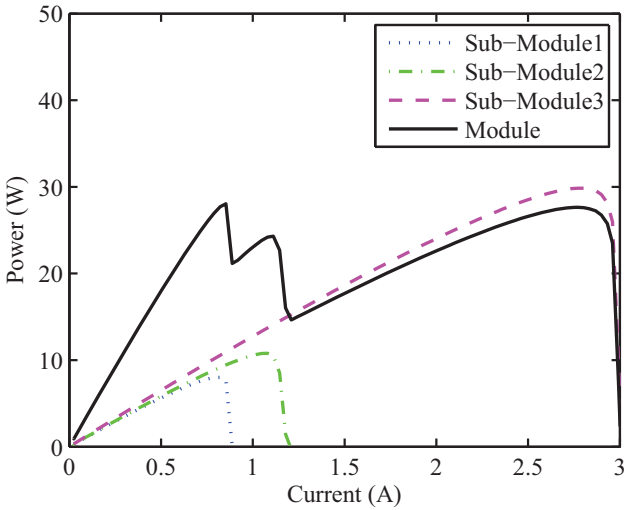

Related Work

	Generation control circuit[1]	Distributed converters (E to E VP)[2]	SubMIC (E to B VP)[3]	This Work
Topology	Multi-stage chopper	Resonant SC	Flyback	Buck-Boost
Local current sensing	No	No	No	No
Communication	Yes	No	No	Yes
Switch voltage rating	String voltage	Sub-module voltage	String/Sub-module voltage	Twice Sub-module voltage
MPPT	True MPPT	Near MPPT	Near MPPT	True MPPT
Easily Scalable	No	Yes	Yes	Yes
Module Integrated	No	Yes	No	Yes

[1] T. Shimizu, et al, "Generation control circuit for photovoltaic modules".

[2] J. Stauth, et al, "Resonant switched-capacitor converters for sub-module distributed photovoltaic power management".

[3] C. Olalla, et al, "Architectures and control of submodule integrated dc-dc converters for photovoltaic

Outline

Sub-module DPP system

- DPP Converters implemented as buck-boost
- Each converter process only power mismatch

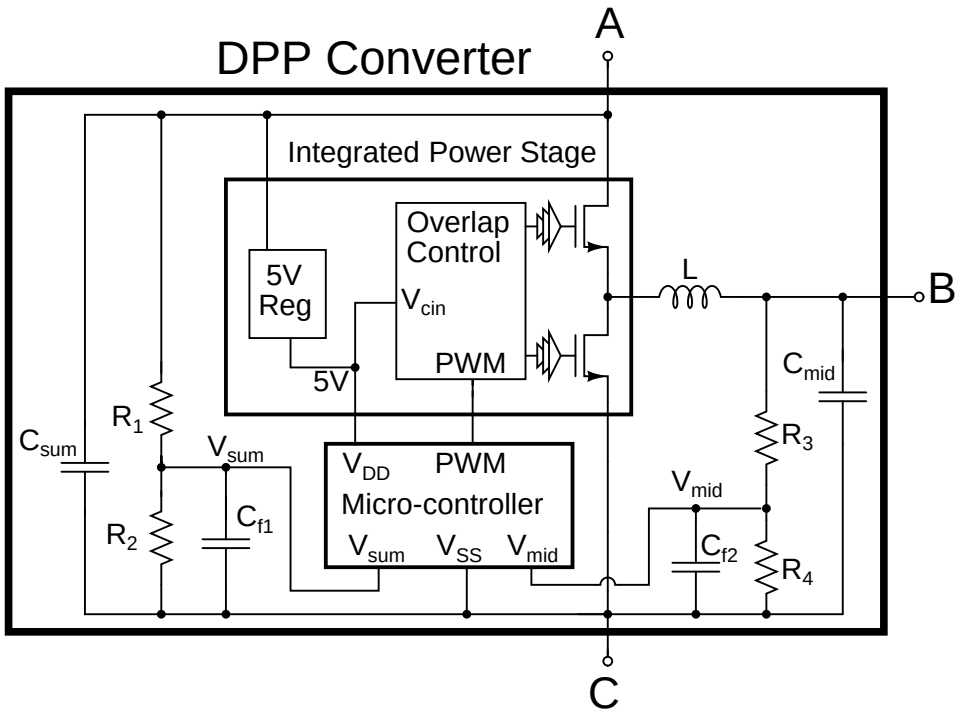

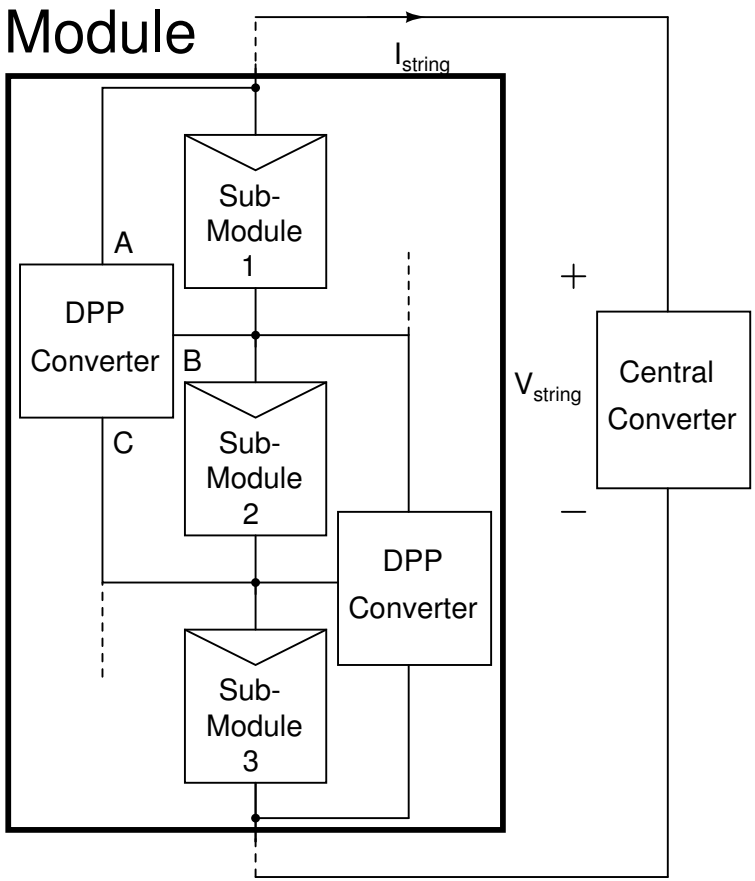

Converter Miniaturization

- Low converter voltage and power rating
- Low voltage, high frequency transistor
- Integration into module junction box

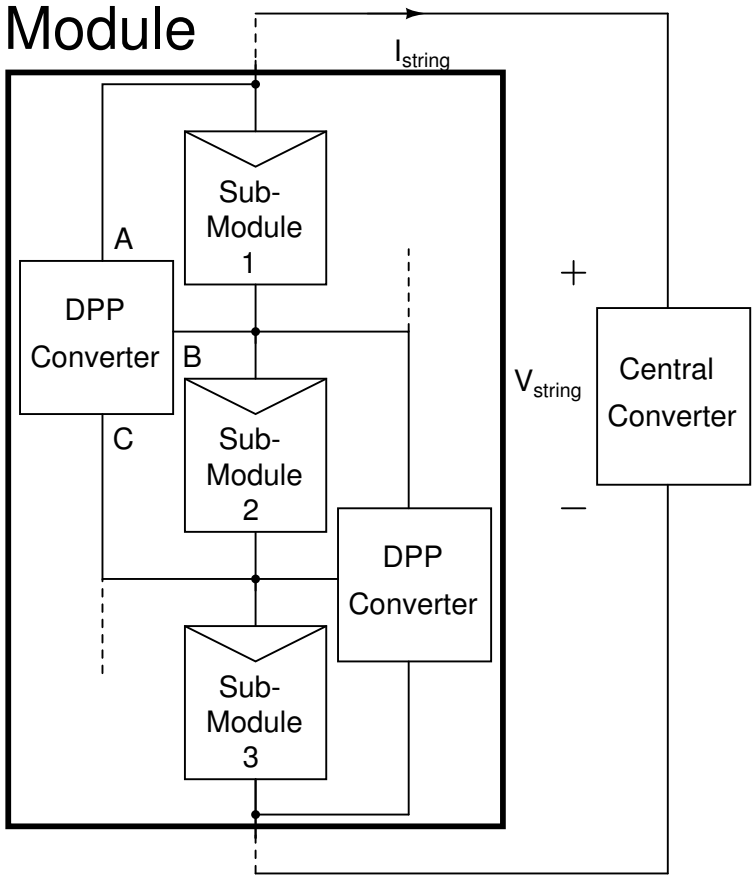

DPP Converter Implementation

Table: Converter Specifications

Converter Topology	Buck-Boost
Sub-module Voltage Range	3-13.5 V
Converter Power Rating	60 W
Switching Frequency	250 kHz
Converter Peak Efficiency	97%
Converter Weight	4.55 grams
Converter Volume	1.91 cm^3

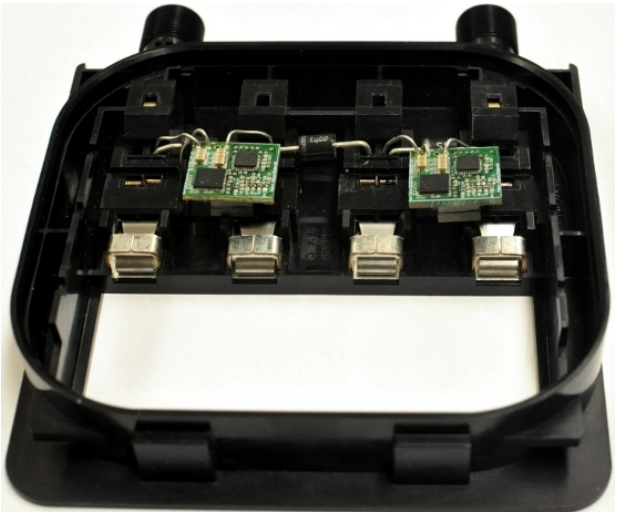

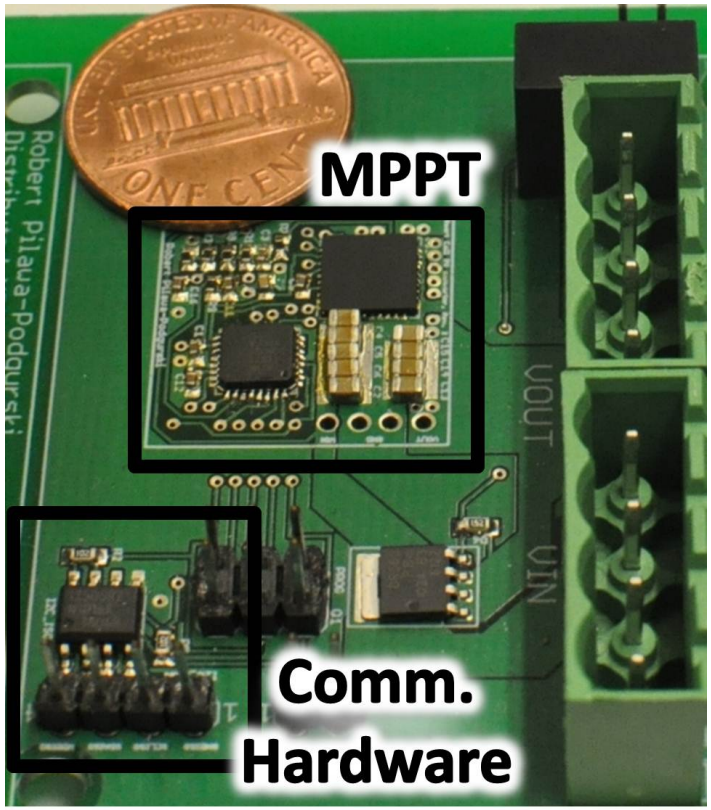

Control Problem Statement - True MPPT

$$P_{string} = V_{string} \times I_{string}$$

- Overall MPP achieved only when MPP at each sub-module (all circuit variables fully determined)
- Central converter performs P&O to I_{string} in a 'slow' loop
- Maximize V_{string} to maximize output power
- DPP converters perform P&O to D_1, D_2, D_3..... to maximize V_{string} in a 'fast' loop

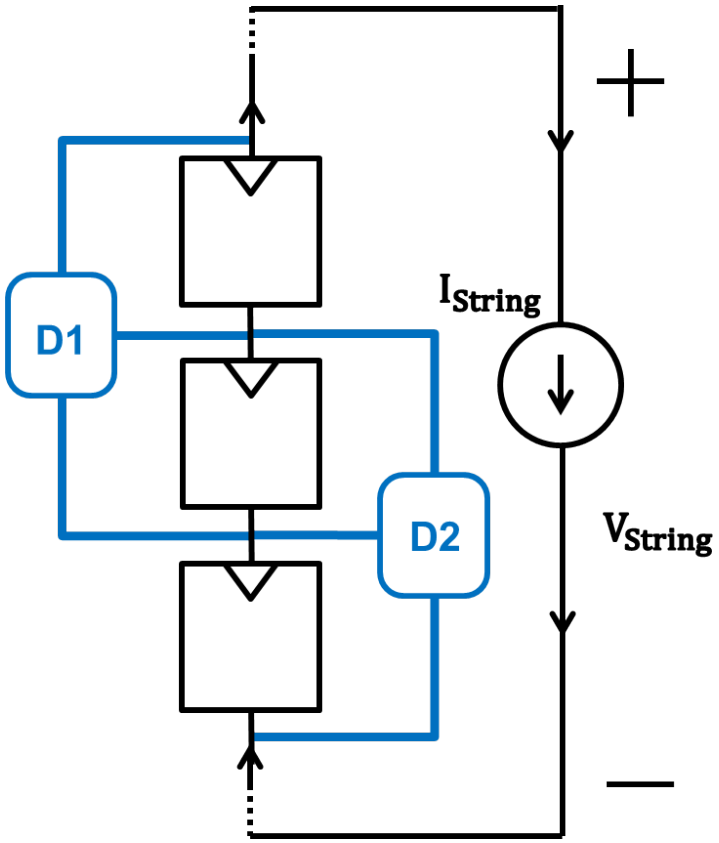

System Model

- V_{string} is a function of duty ratio D_1, D_2, D_3..... given other parameters fixed
- This function only has one maximum point for a given string current
- Perturb each duty ratio in turns and observe change in string voltage to find:

$$\arg \max_{D_i \in \langle 0,1 \rangle} V_{string}(D_i)$$

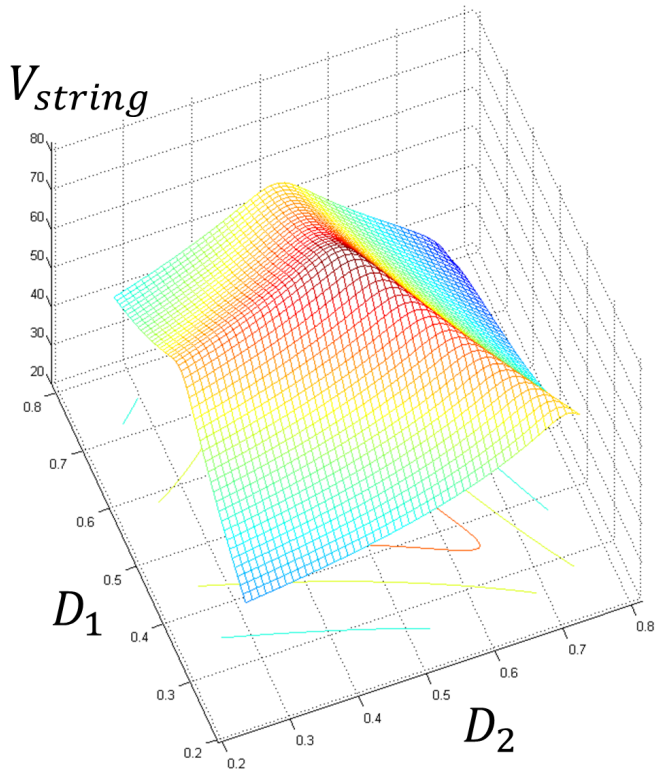

3-dimensional plot of string voltage (V_{string}) versus DPP converter duty ratios (D_1, D_2) for a 3-sub-module 2-converter system

Outline

PV Module Emulation[1]

PV module emulation enables controllable and repeatable PV experiment in an indoor environment.

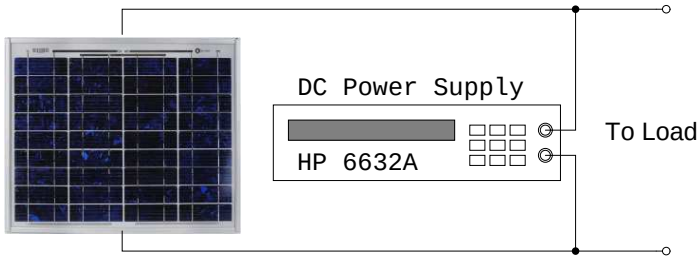

(c) Hardware connection.

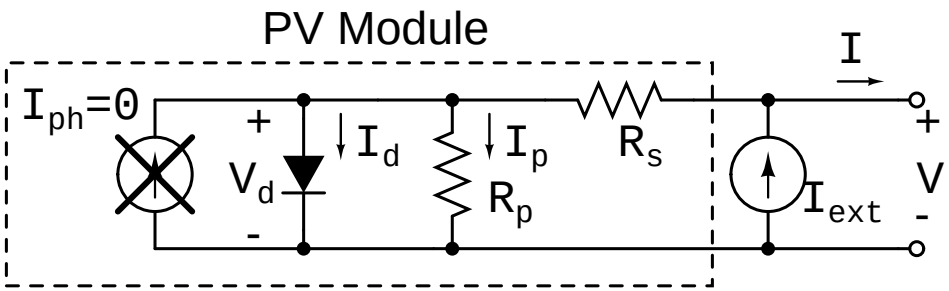

(d) Equivalent circuit schematic.

Figure: Emulation of PV module.

[1] S. Qin, et al, "Laboratory Emulation of a Photovoltaic Module for Controllable Insolation and Realistic Dynamic Performance", PECI 2013

Experiment Setup[1]

- Test system consists of three PV sub-modules
- Two converters communicate to a computer through I^2C
- An electronic load acts as the central inverter

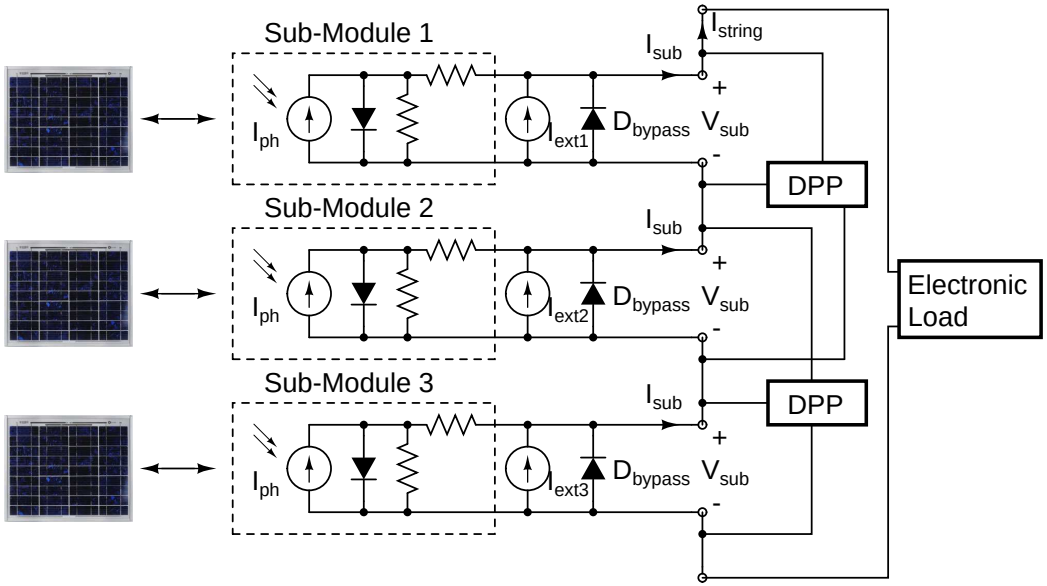

Schematic drawing of laboratory test setup

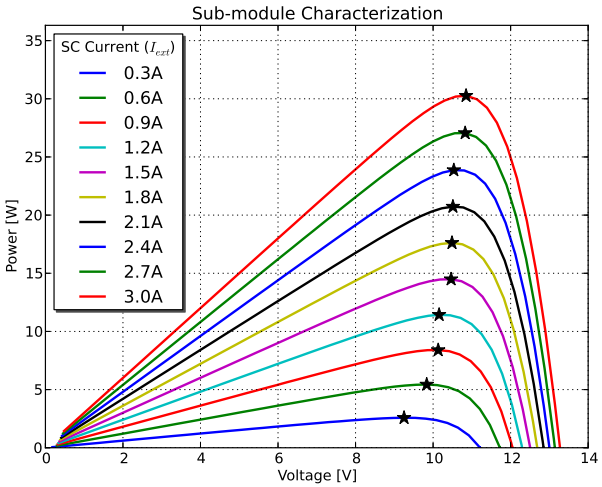

Power versus voltage characteristics of controlled laboratory PV sub-module setup

[1] S. Qin, et al, "Laboratory Emulation of a Photovoltaic Module for Controllable Insolation and Realistic Dynamic Performance", PECI 2013

Experiment Result

- Output current sweep performed by electronic load
- Substantial power output improvement
- Elimination of local maxima caused by bypass diode

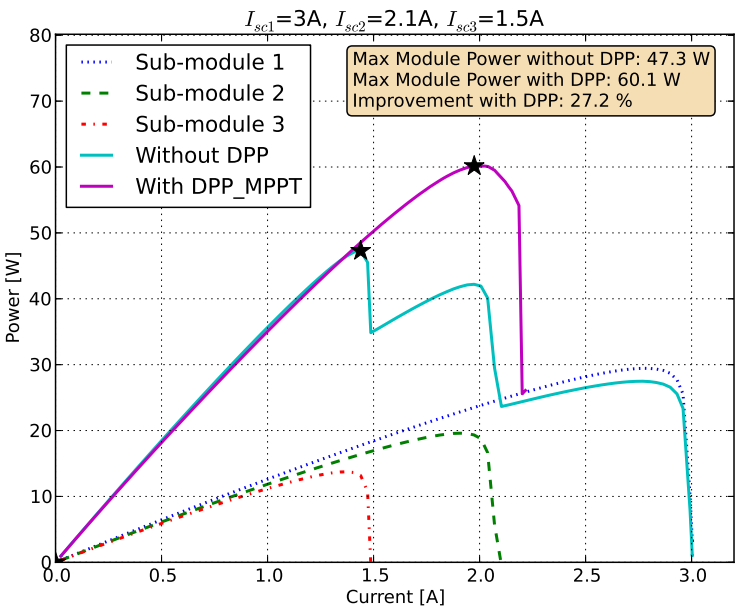

Moderate mismatch

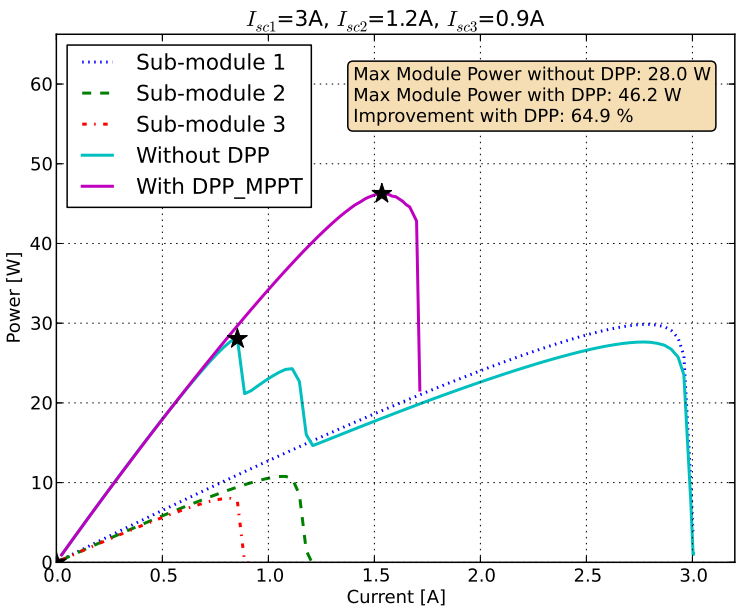

Severe mismatch

Experiment Result

Power output improvement in different partial shading conditions

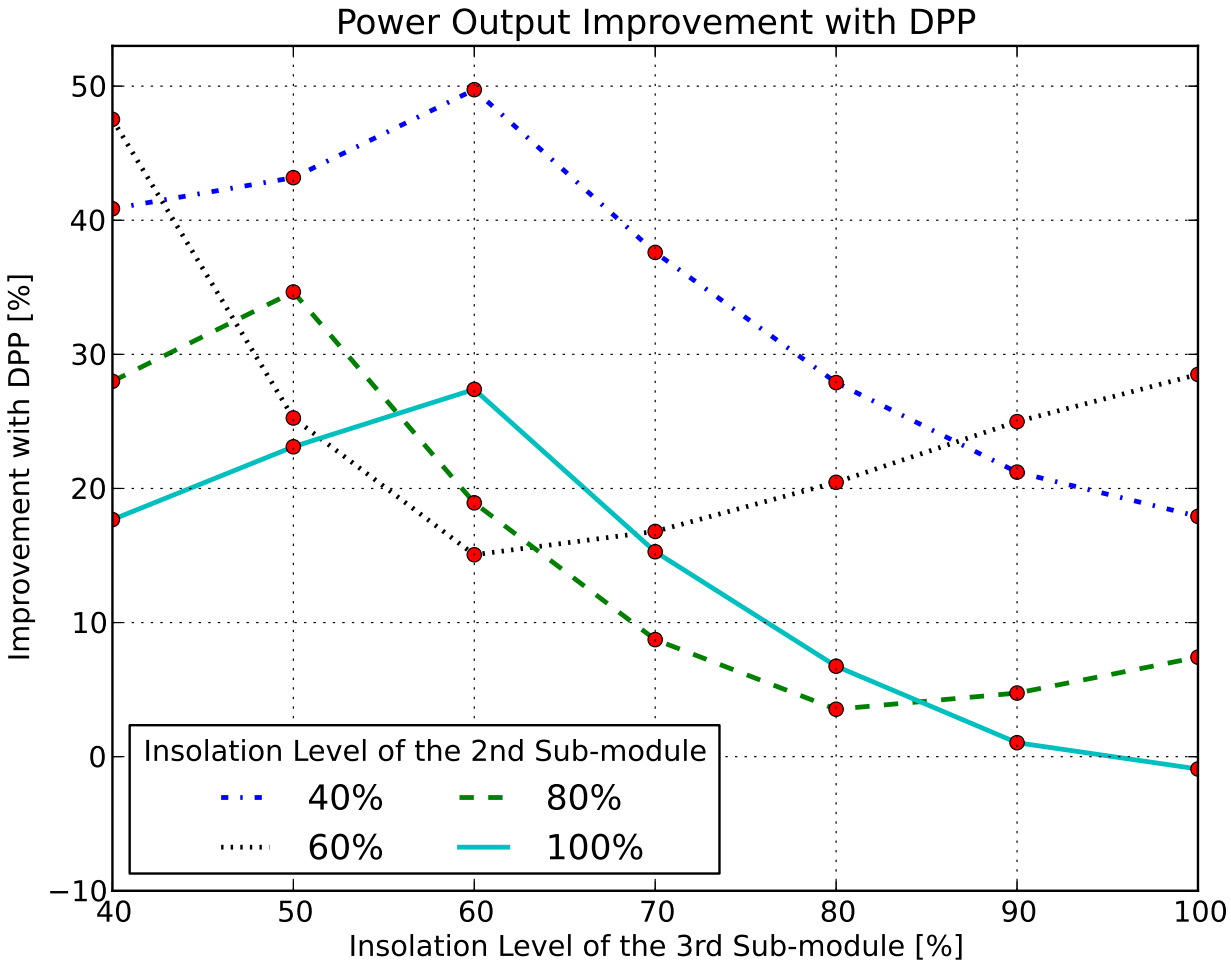

Efficiency Considerations

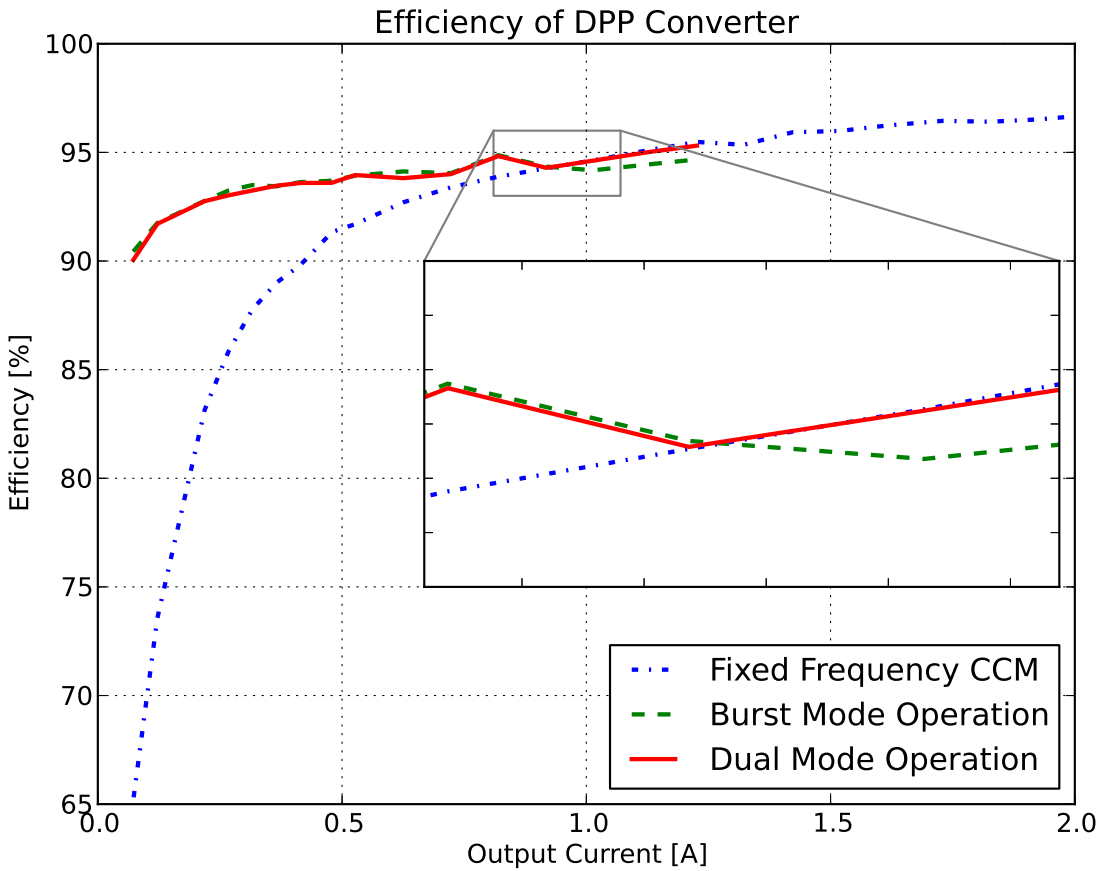

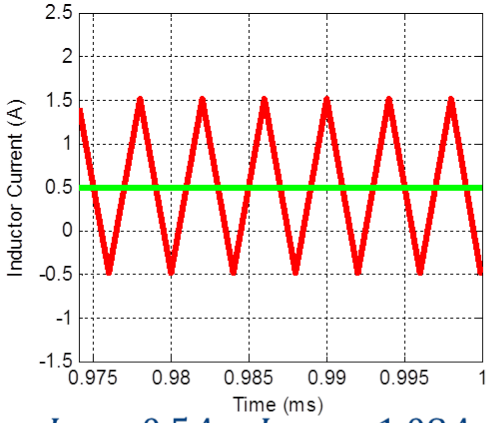

$I_{av} = 0.5A \quad I_{RMS} = 1.08A$

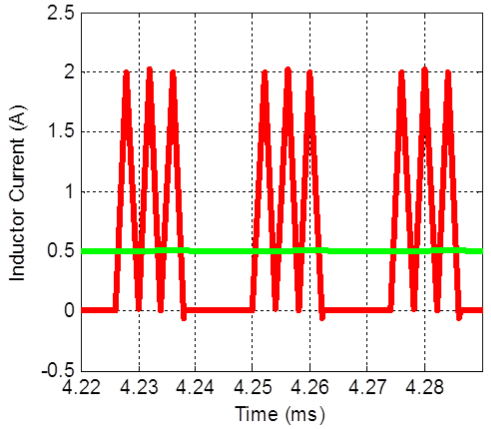

$I_{av} = 0.5A \quad I_{RMS} = 0.89A$

Summary

- Differential power processing can significantly improve power yield, and reduce size and cost of PV system
- True MPPT can be achieved with no local current sensing and fast tracking by the architecture and control scheme presented
- The effectiveness of the proposed solution has been experimentally verified by a controllable indoor test setup

QUESTIONS?

Contact:Shibin Qin
Email:sqin3@illinois.edu

Power Rating of DPP Converters