Control and Modulation Schemes for High-Performance Electrical Drive Systems

Tobias Geyer

Department of Electrical and Computer Engineering
The University of Auckland
New Zealand

In collaboration with

Outline

Introduction

- Variable speed drives
- Market drivers and R&D trends
- Control and modulation schemes

Three recent drive developments

- Model predictive DTC: *pred. control fully utilizes the hardware capability*
- ABB's new 5-level topology: *modern control is the enabling technology*
- 35 MW electrical drive: *fault tolerance maximizes the availability*

Conclusions and outlook

What are
Variable Speed Drives?

Variable Speed Drives

Electrical machine

Electro-mechanical **power conversion**

+

Power electronics

Decoupling of the machine from the grid => **variable speed** operation

+

Controller

Control of the machine **currents** => **fast torque** and speed response

Variable Speed Drives

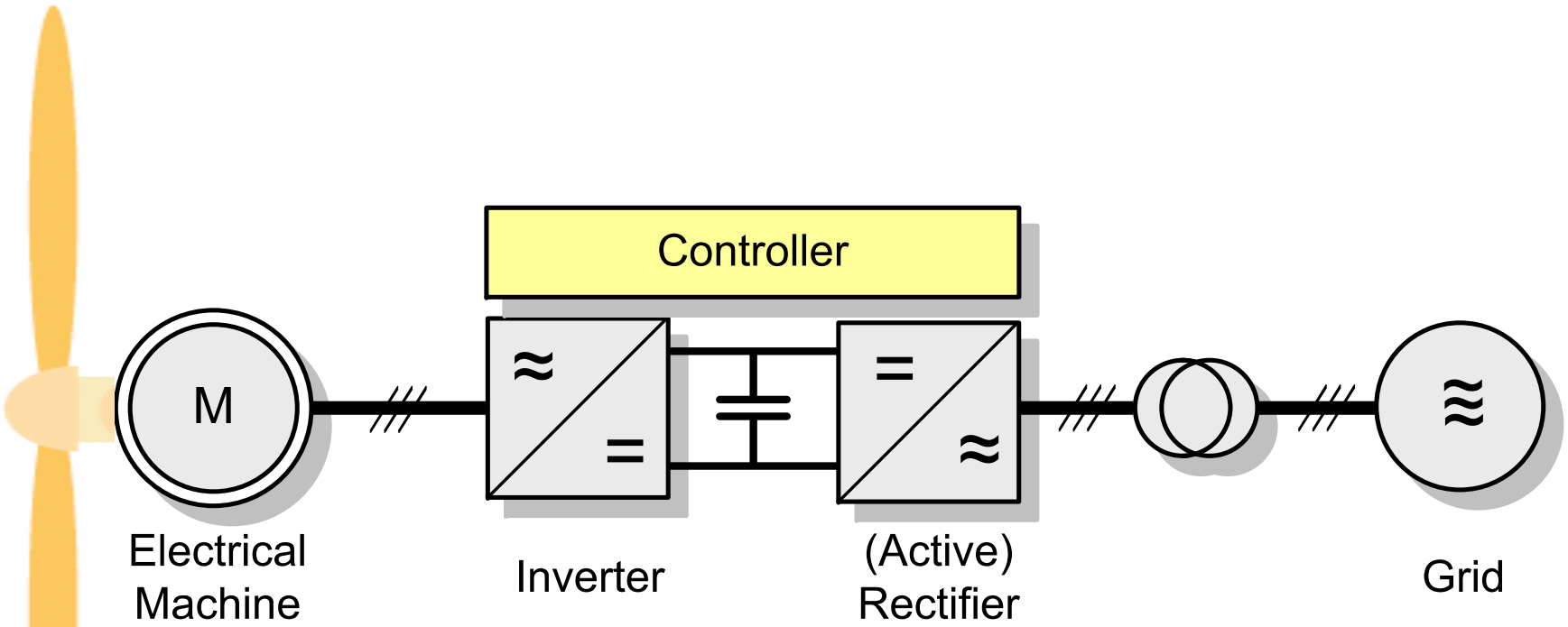

Plus **auxiliaries:** cooling, protection, etc

Variable Speed Drives

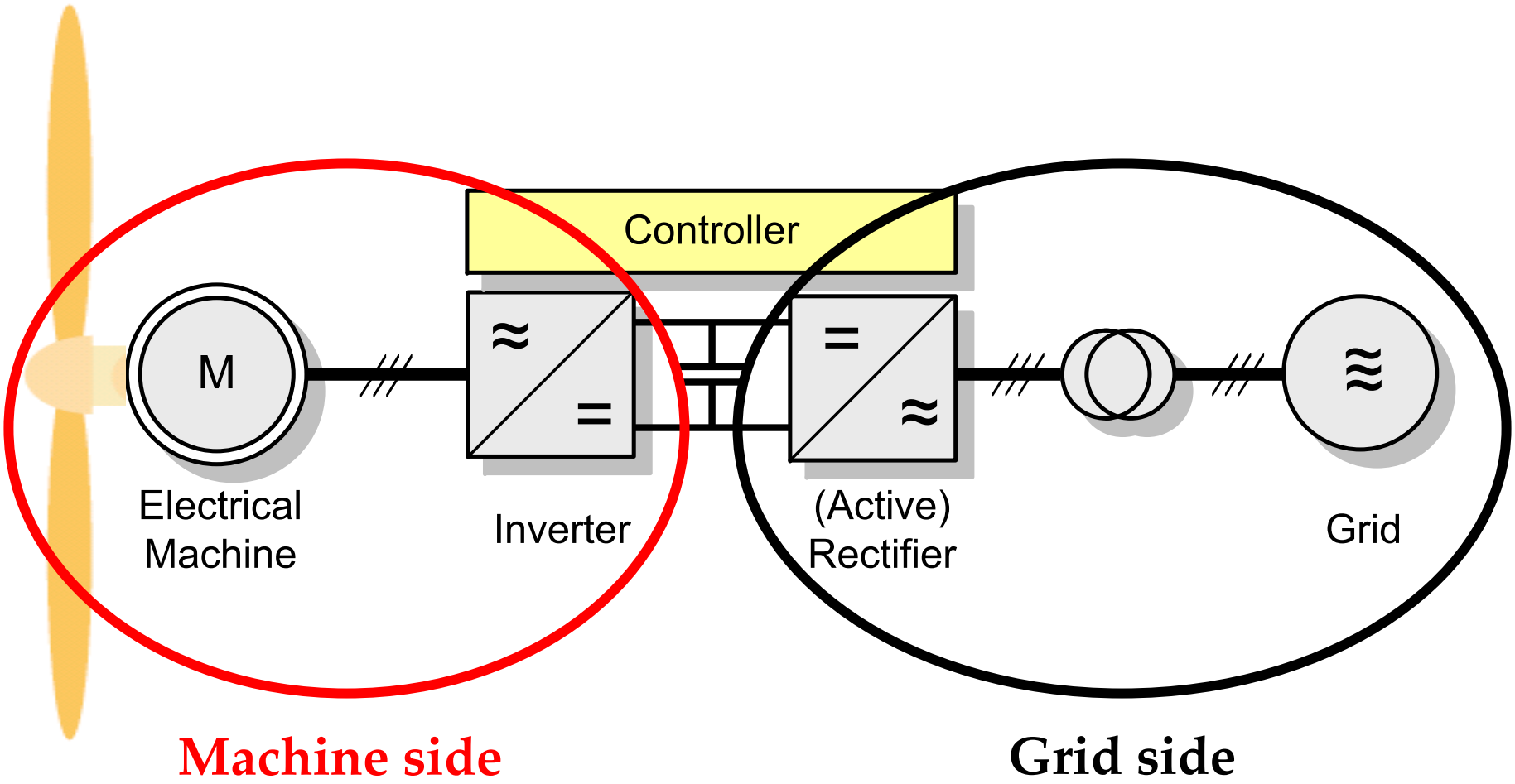

Key Application Areas of Variable Speed Drives

Power Generation

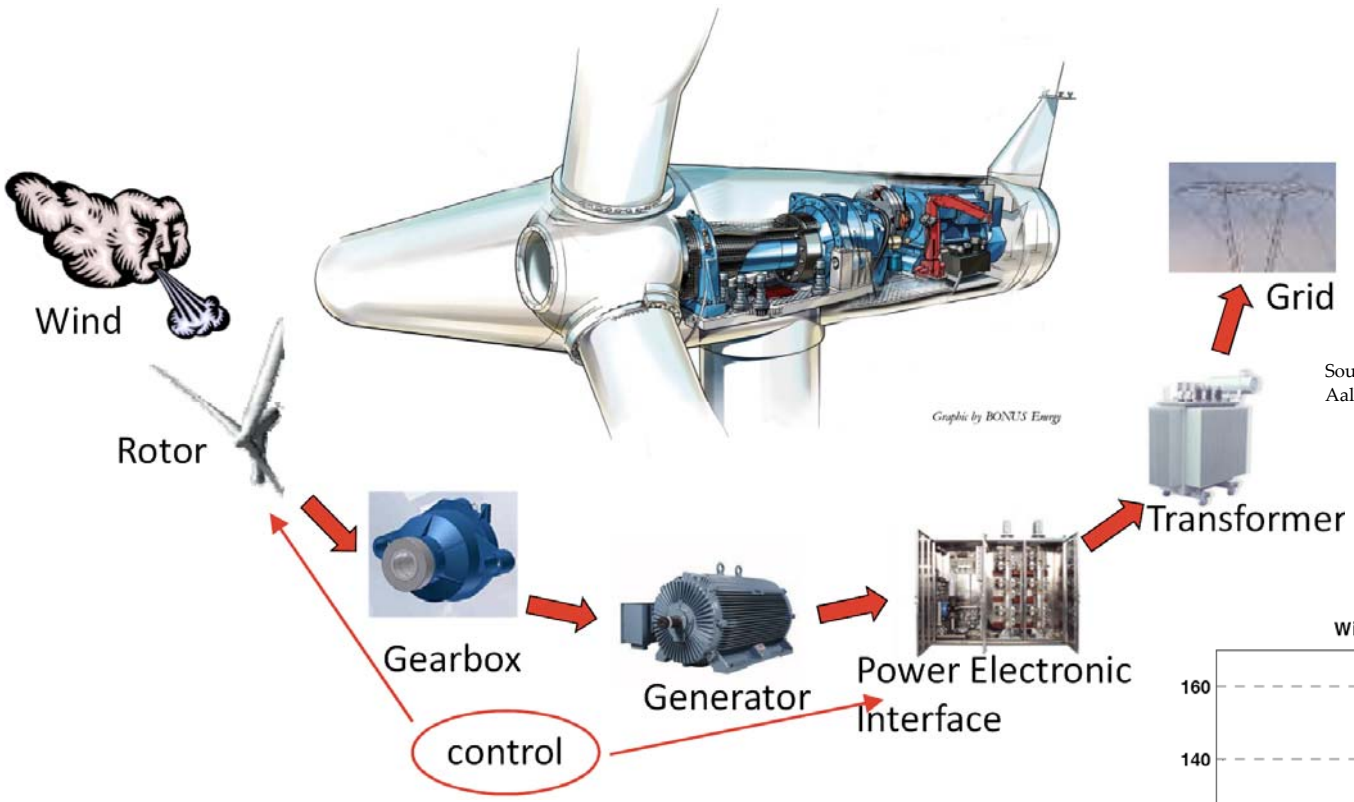

Source:
Aalborg University

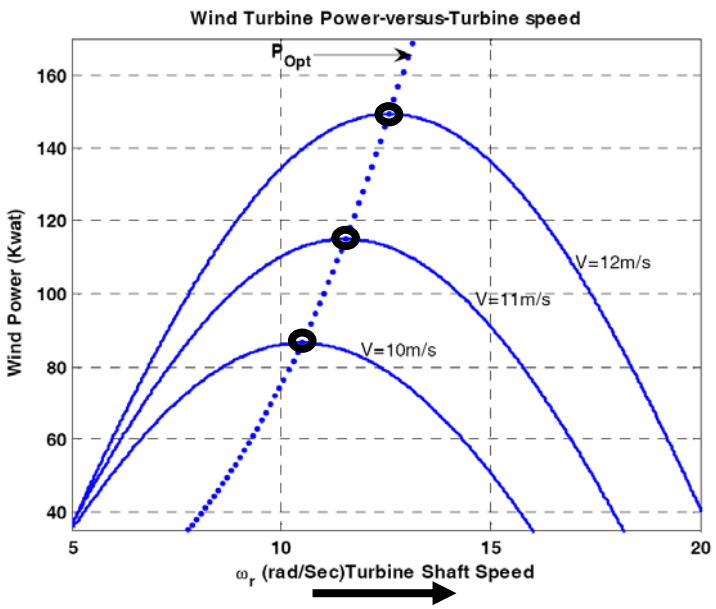

Purposes of Variable Speed Drive:

- Electro-mechanical power conversion
- Variable speed operation = > higher efficiency
- Fast control of the turbine torque

Electrification

Augment **combustion engine** by an **electric drive:**

=> Increase **efficiency**

=> Reduce **emissions** / fuel consumption

=> Simplify mechanical **drive train** (remove clutch, gear box, etc)

Example: diesel-electric train engine

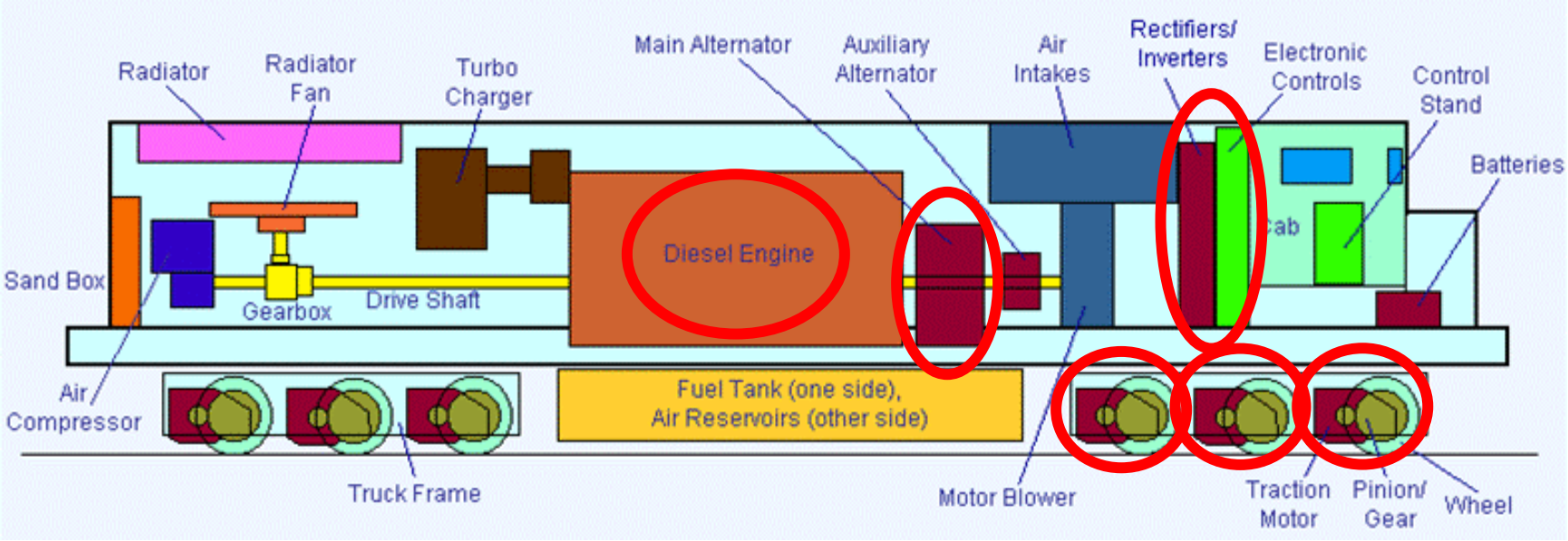

Electrification

Augment **combustion engine** by an **electric drive:**

=> Increase **efficiency**

=> Reduce **emissions** / fuel consumption

=> Simplify mechanical **drive train** (remove clutch, gear box, etc)

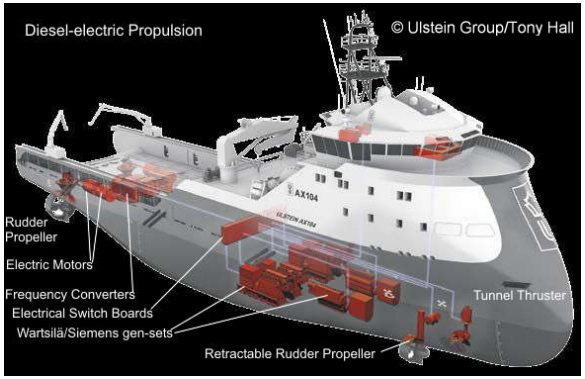

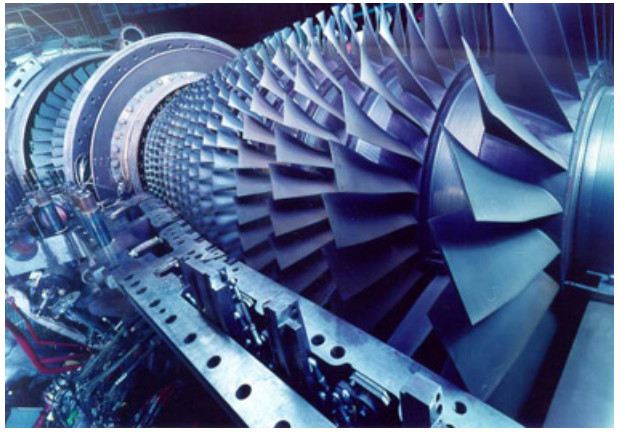

Summary: Applications of Variable Speed Drives

Power generation

- Wind turbines
- Pumped hydro (storage)

Electrification

- Electric vehicles (HEV, plug-in HEV, EV)
- Diesel-electric train engines
- Off highway vehicles (OHV)
- Ships
- Oil&Gas: LNG, pipeline compression, subsea pumps
- More electric aircraft

Moreover

- Rolling steel mills
- Pumps, fans, blowers, conveyor belts, etc
- Numerous applications with smaller power

Market Drivers and R&D Trends

Market Drivers and R&D Trends

Market Drivers:	R&D Trends:
• Higher **efficiency** • Lower CO_2 **emissions**	• Variable speed drives (**electrification**) • Induction machines => (permanent magnet) **synchronous machines**
• Lower current and torque **distortions** • Lower **losses** in the inverter	• New **control** and **modulation** schemes • Wide **bandgap** semiconductor devices (SiC etc)
• **Higher power**, voltage, **speed**	• **Multi-level** topologies
• Higher **reliability** / **availability**	• Redundancy • **Fault-tolerance** • Online diagnostics

Control and Modulation Schemes

Principle of Power Electronics

Single-phase half bridge

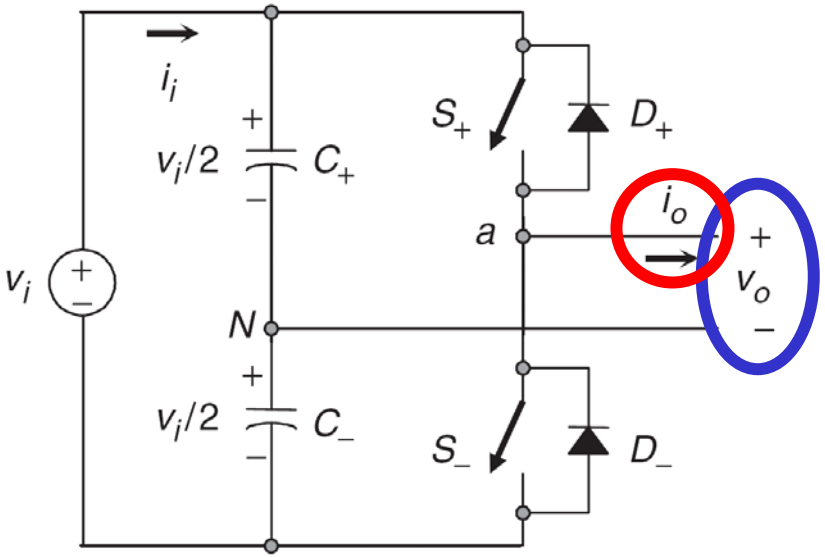

Voltage v_o

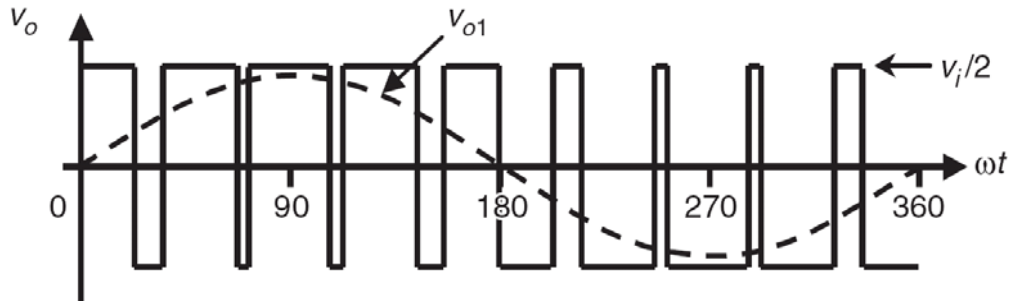

Current i_0

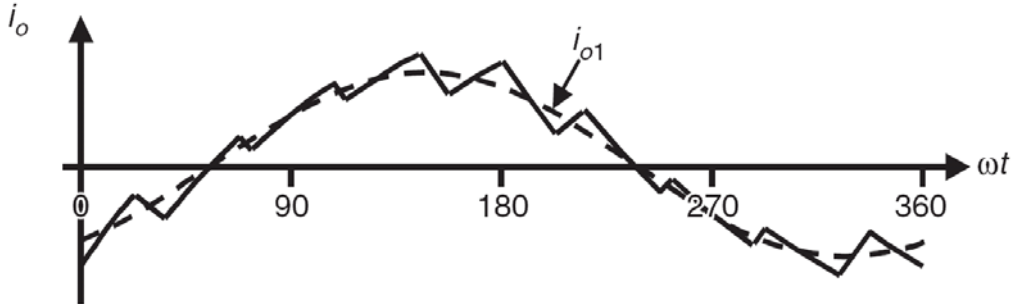

Semiconductors are operated in **on/off mode** (nonlinear regime)

=> Sinusoidal voltage waveforms are **approximated** by **switching pattern**

=> Current **distortions** and switching **losses**

But: **Inductive** load acts as **low-pass** filter for currents

Control and Modulation: Requirements

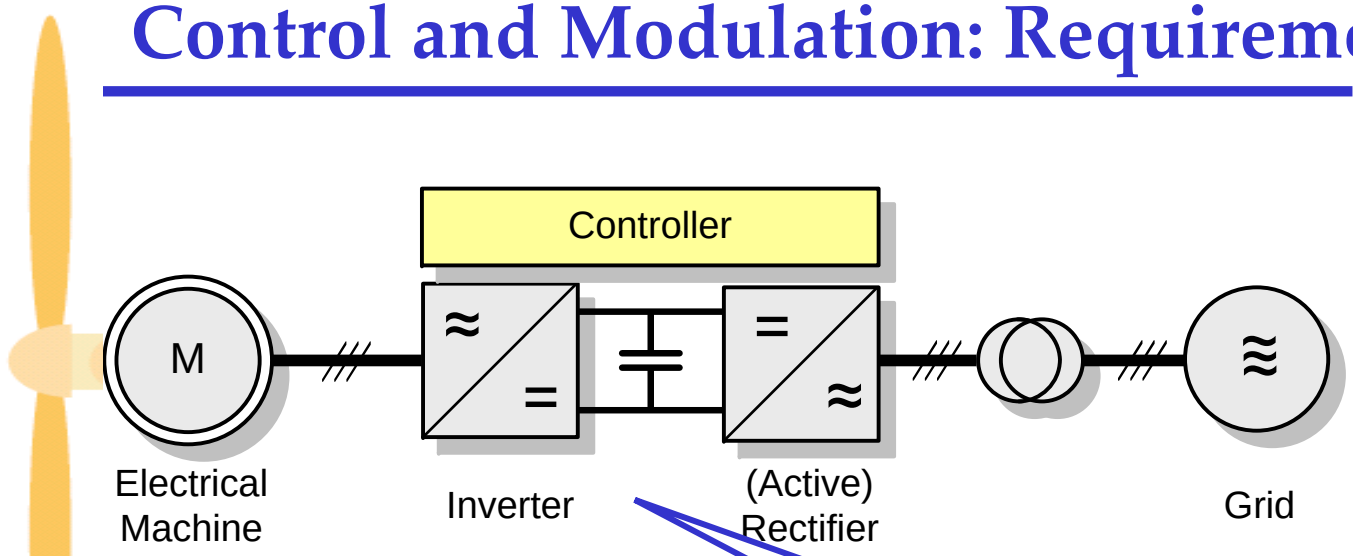

Low **current** distortions => low **thermal** losses

Low switching **losses** => high **efficiency**, low **thermal** losses

Low **torque** distortions => no excitation of mech. **resonances**

Fast torque response => high **dynamic** performance

Control and Modulation

- **Cascaded** control loops:
  - Speed control loop
  - Current control loop
- **Current** control **problem**
  => split into **current controller** and **modulator**

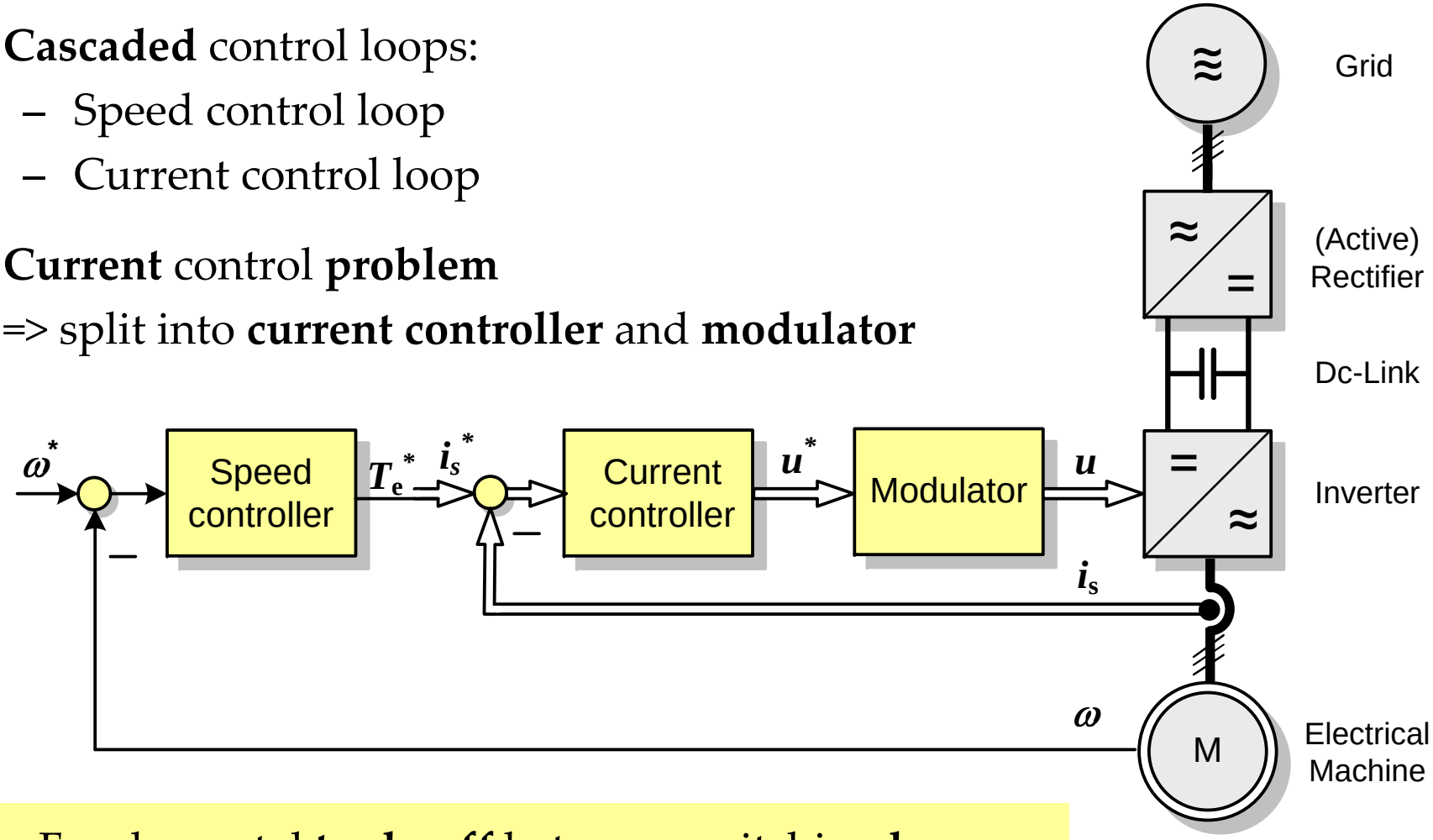

Fundamental **trade-off** between switching **losses** (frequency) and the current / torque **distortion** levels

Trade-Off (*High* Switching Frequency)

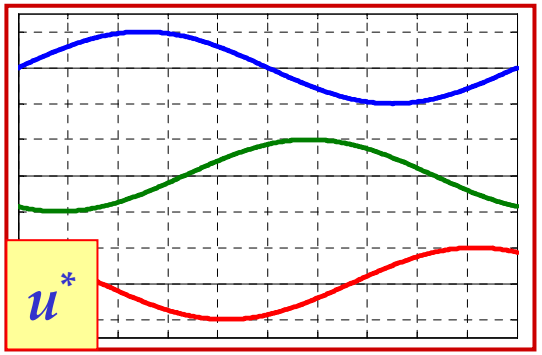

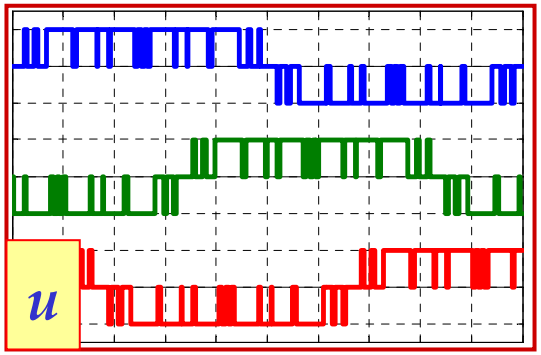

f_{sw}=700Hz

P_{sw}=**16.7**kW, P_{con}=2.7kW

THD_I=2.31%

THD_T=1.93%

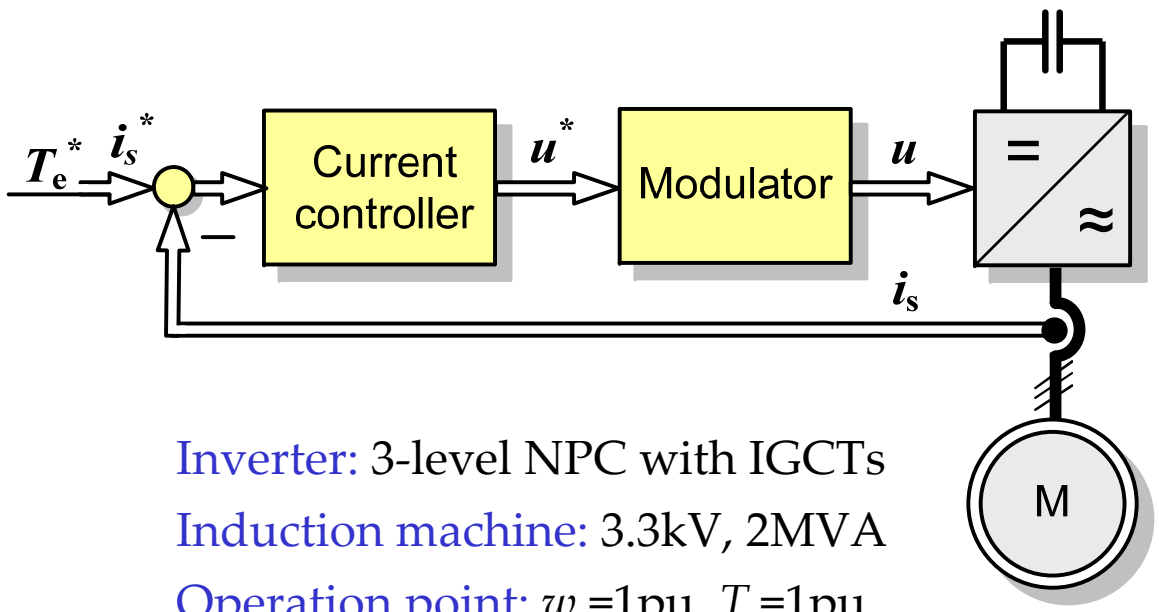

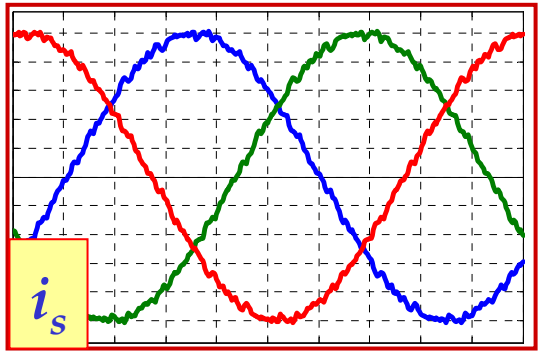

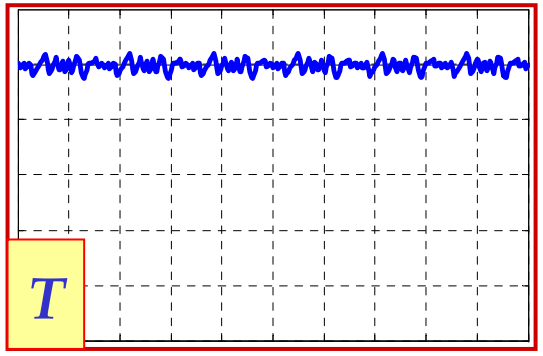

Inverter: 3-level NPC with IGCTs

Induction machine: 3.3kV, 2MVA

Operation point: w_e=1pu, T_e=1pu

Trade-Off (*Low* Switching Frequency)

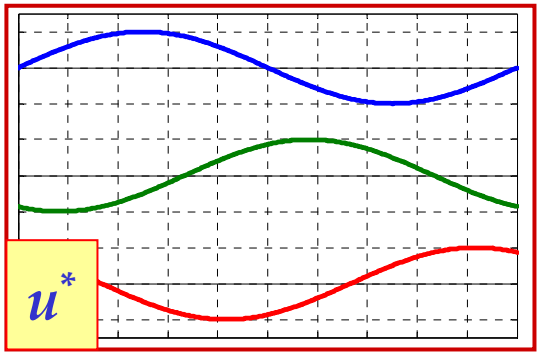

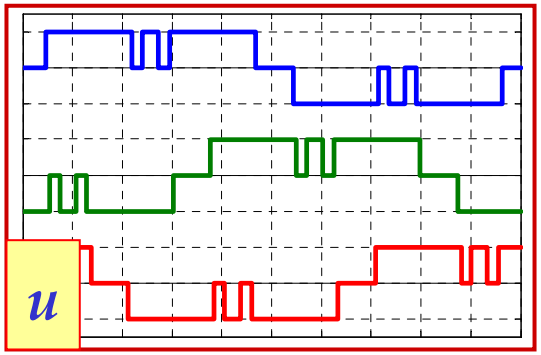

f_{sw}=150Hz

P_{sw}=**3.9**kW, P_{con}=2.8kW

THD_I=6.9%

THD_T=6.0%

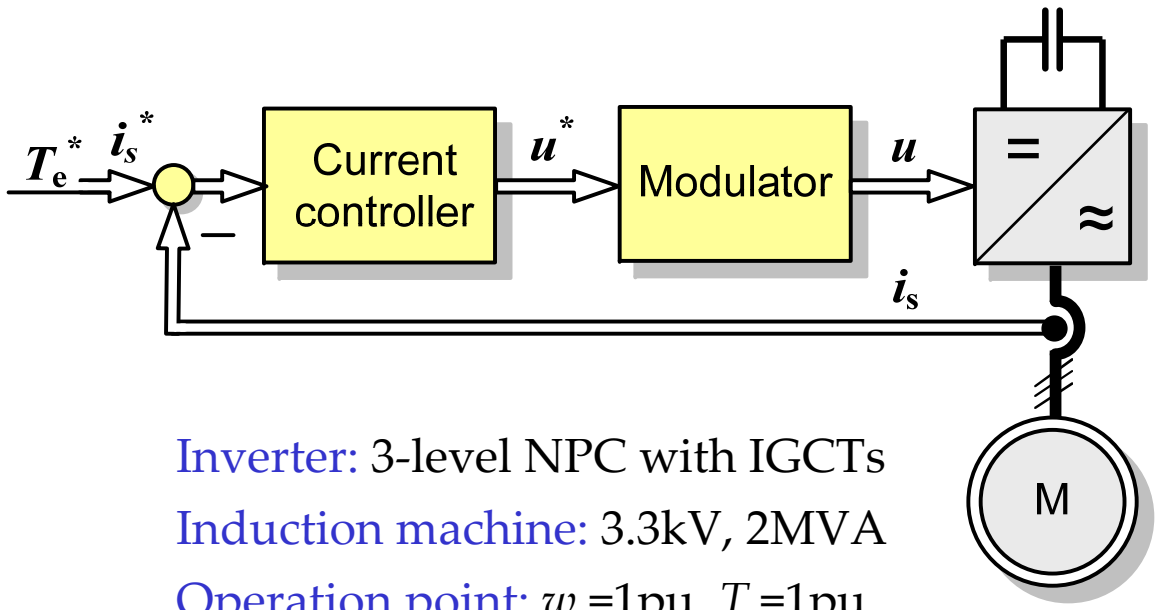

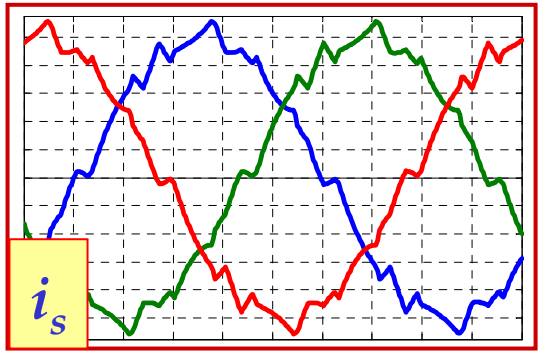

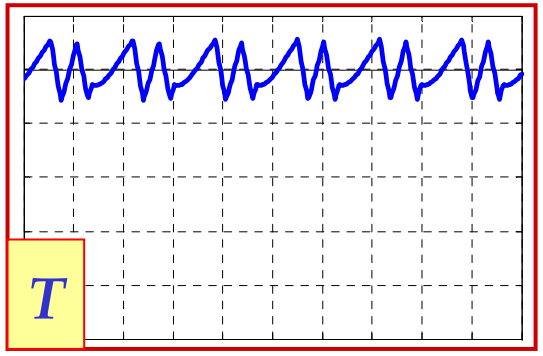

Inverter: 3-level NPC with IGCTs

Induction machine: 3.3kV, 2MVA

Operation point: w_e=1pu, T_e=1pu

Trade-Off for PWM / SVM

Current THD vs switching losses

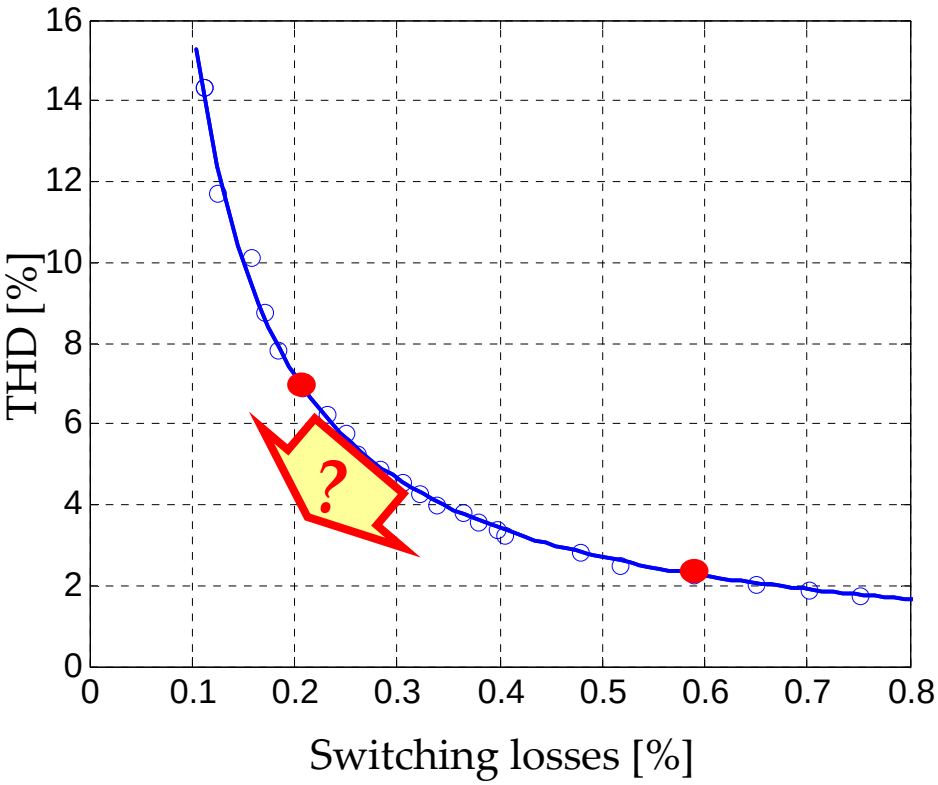

$$I_{s,\mathrm{THD}} \cdot P_{\mathrm{sw}} = \mathrm{const}$$

Torque THD vs switching losses

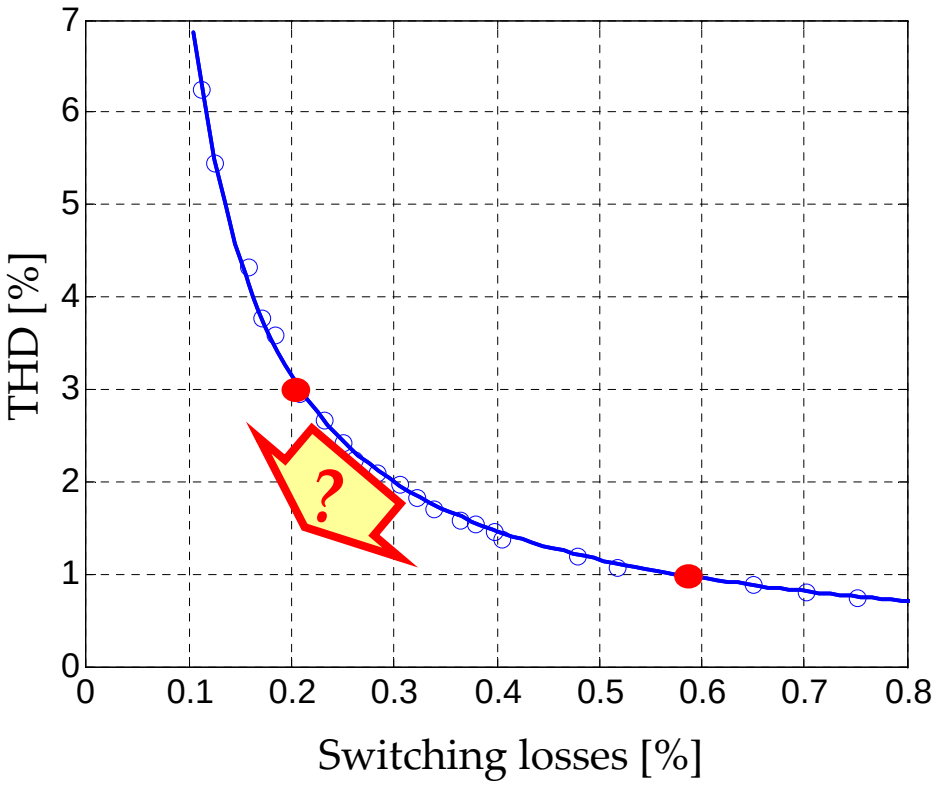

$$T_{e,\mathrm{THD}} \cdot P_{\mathrm{sw}} = \mathrm{const}$$

Control and Modulation: Standard Schemes

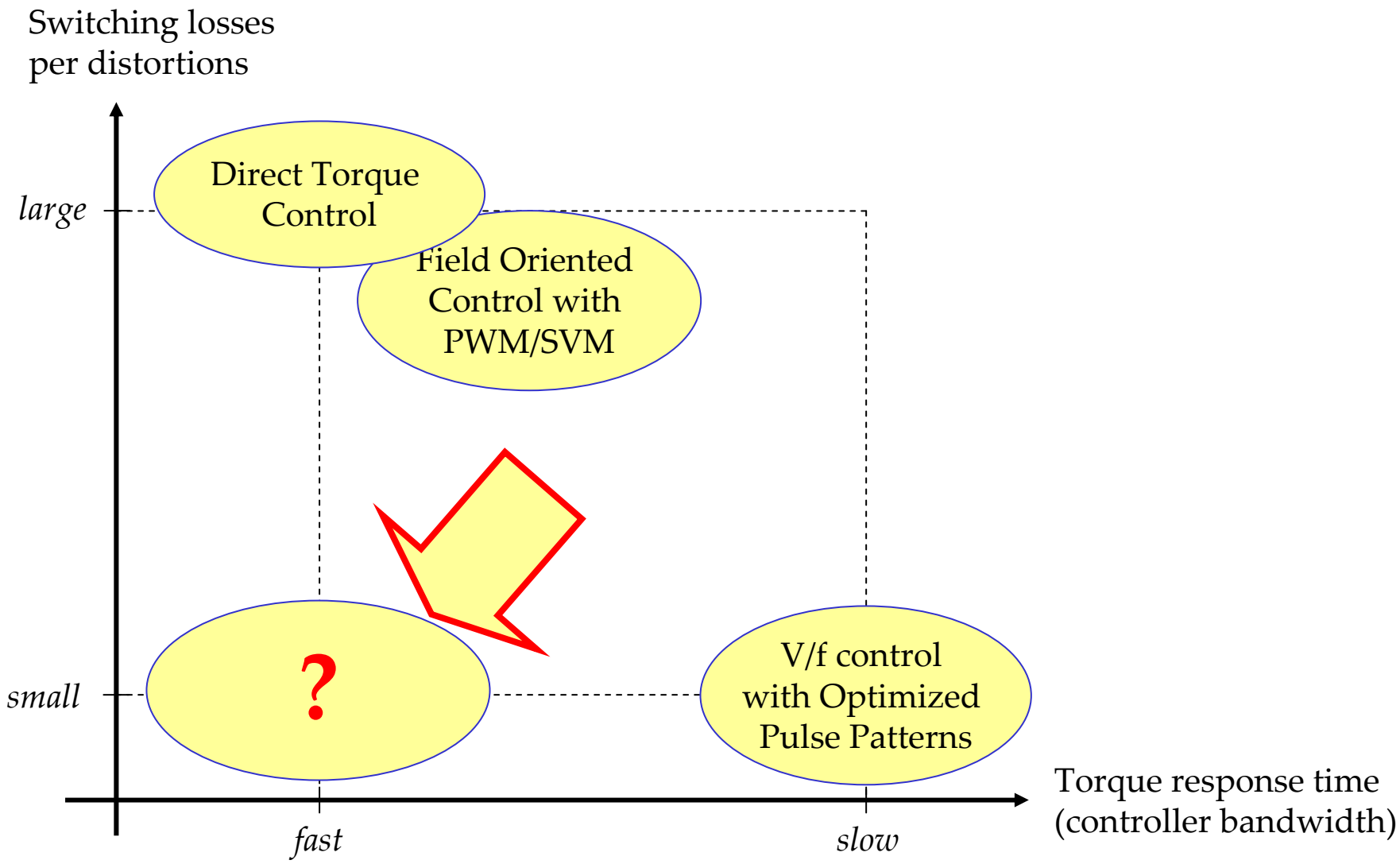

Control and Modulation: New Methods

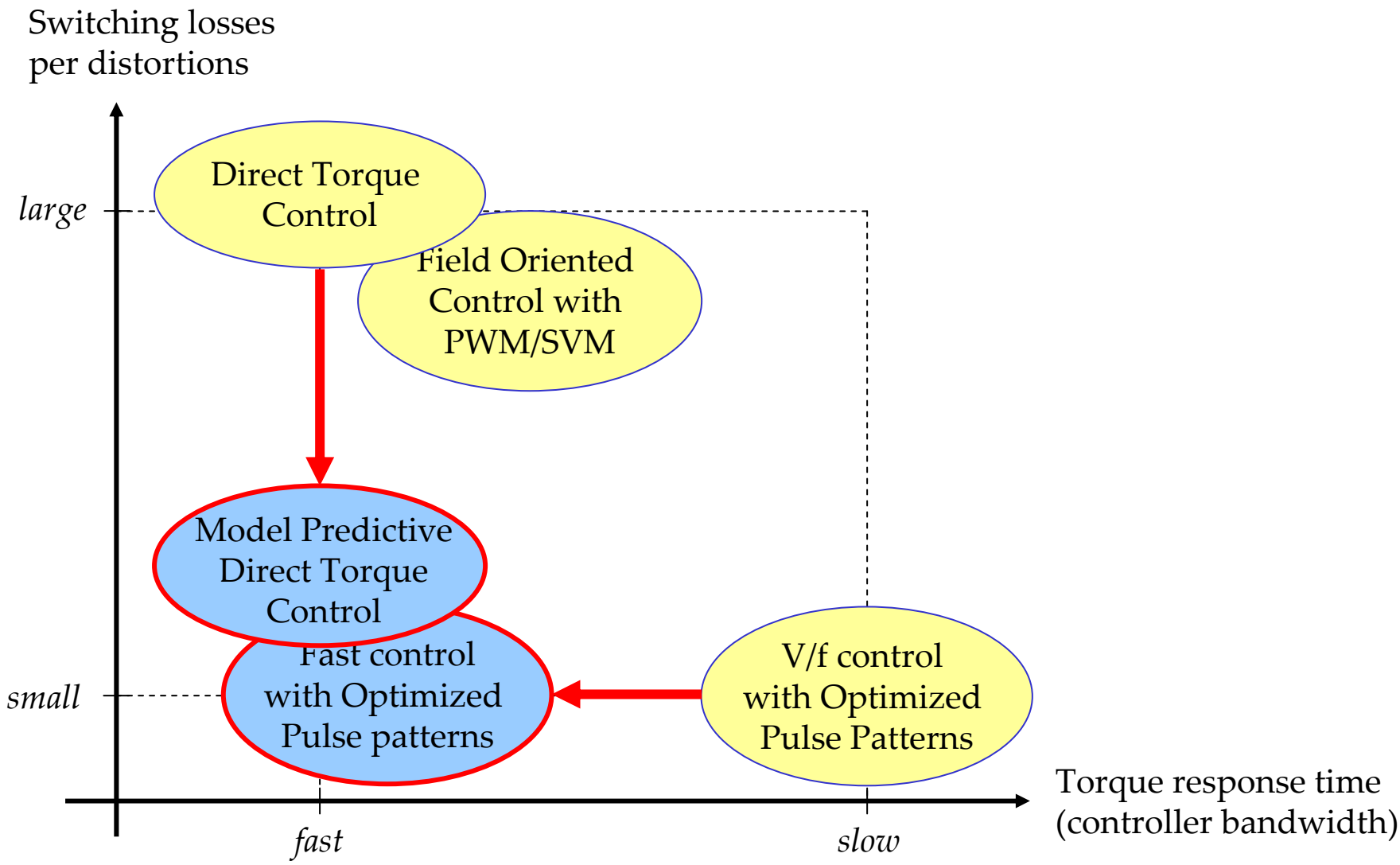

Control and Modulation: New Methods

Goal: Fully utilize capability of drive hardware

- Minimize **switching losses** per **distortions**
- Achieve very **fast** torque response

Approach:

- Treat control and modulation problem in **one stage**
- Work in the **time-domain**
- Use **model predictive control**

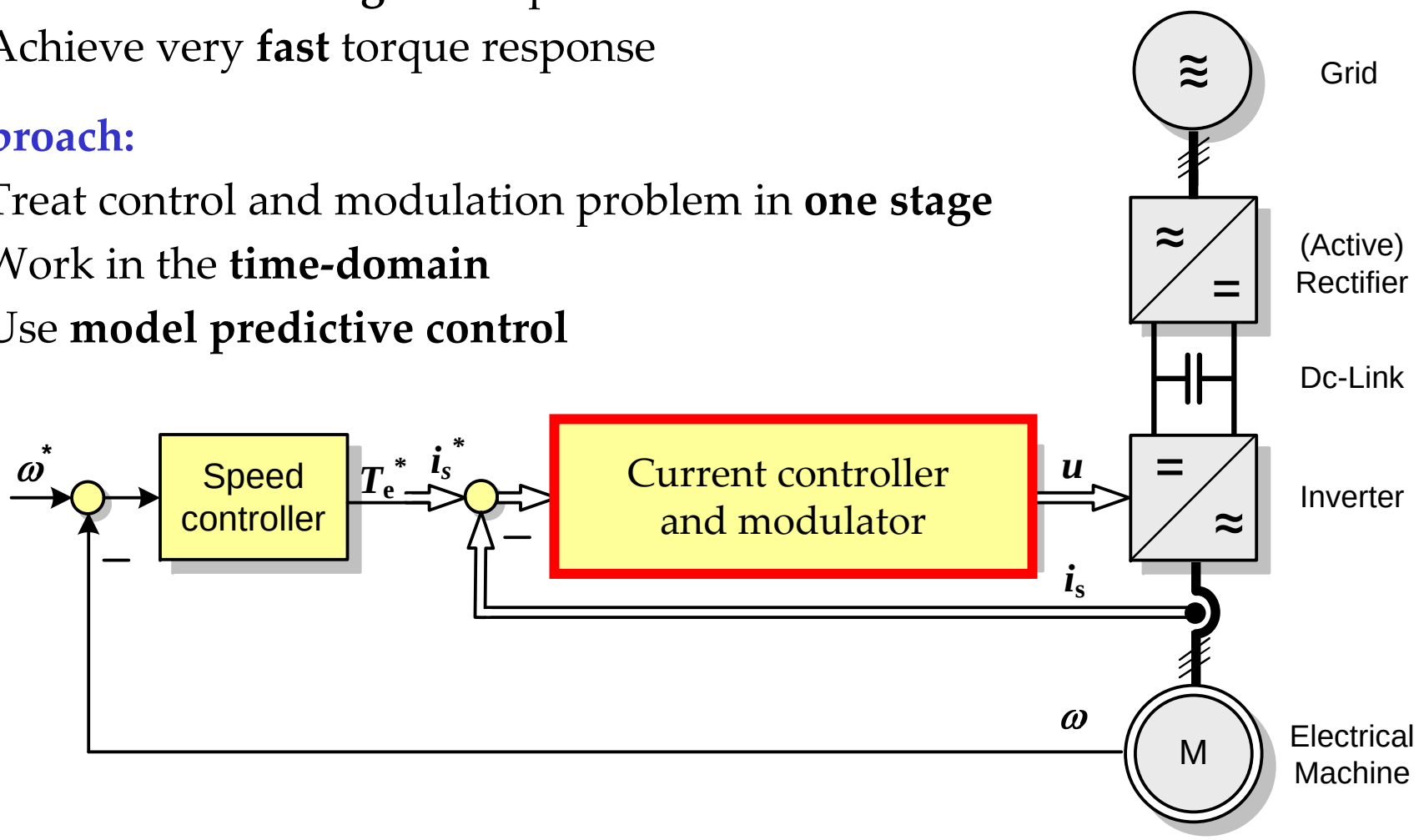

Model Predictive DTC:

fully utilizing hardware capability

ABB's ACS 6000

Drive:

- 3-level NPC inverter with induction machine
- Up to 9MVA, 3.3kV
- Most **widely used** medium-voltage drive

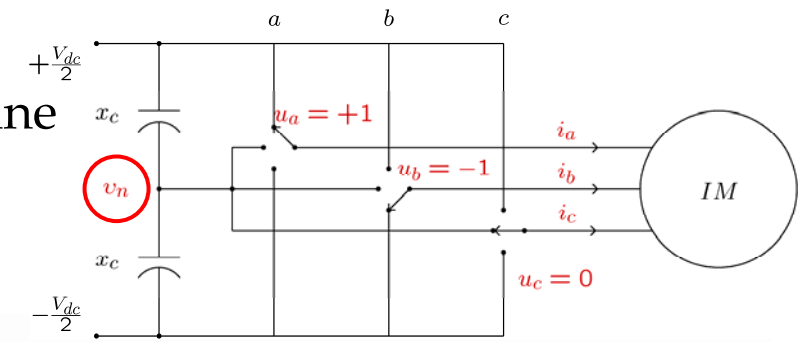

Applications:

- Large **wind turbines**
- Steel mills
- Large pumps, fans, compressors

Objectives:

- Low **switching losses** in the inverter
- Low current and torque **distortions**
- **Fast** torque and speed control

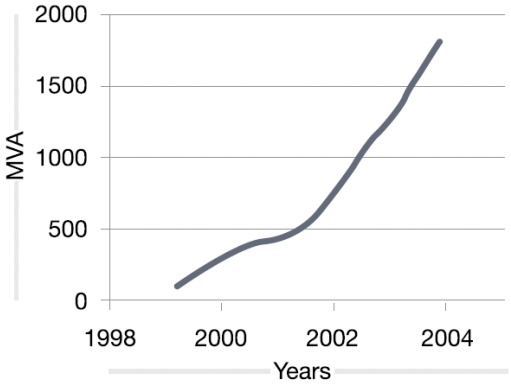

Direct Torque Control

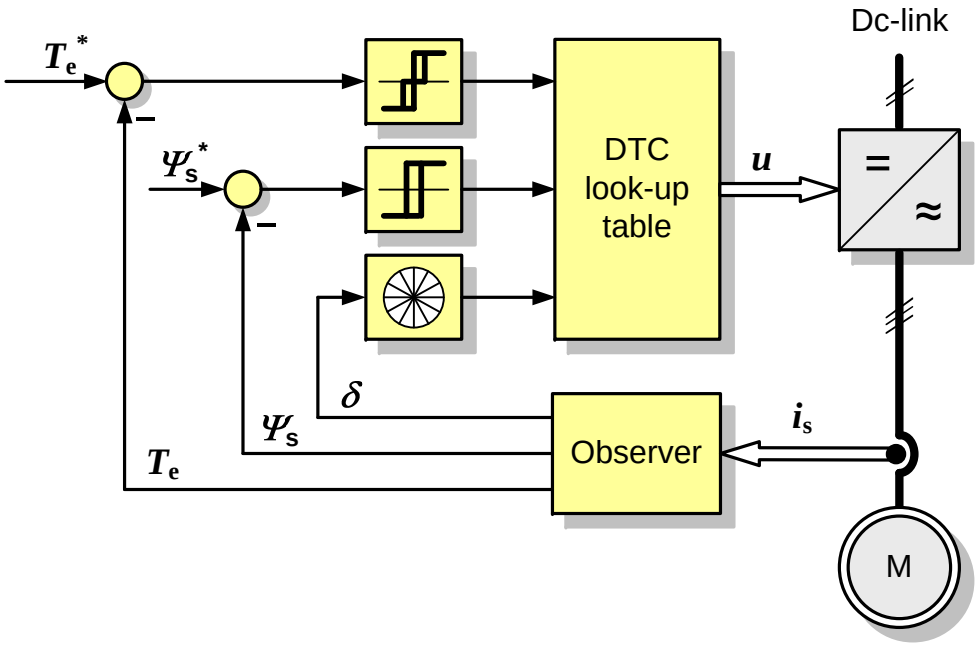

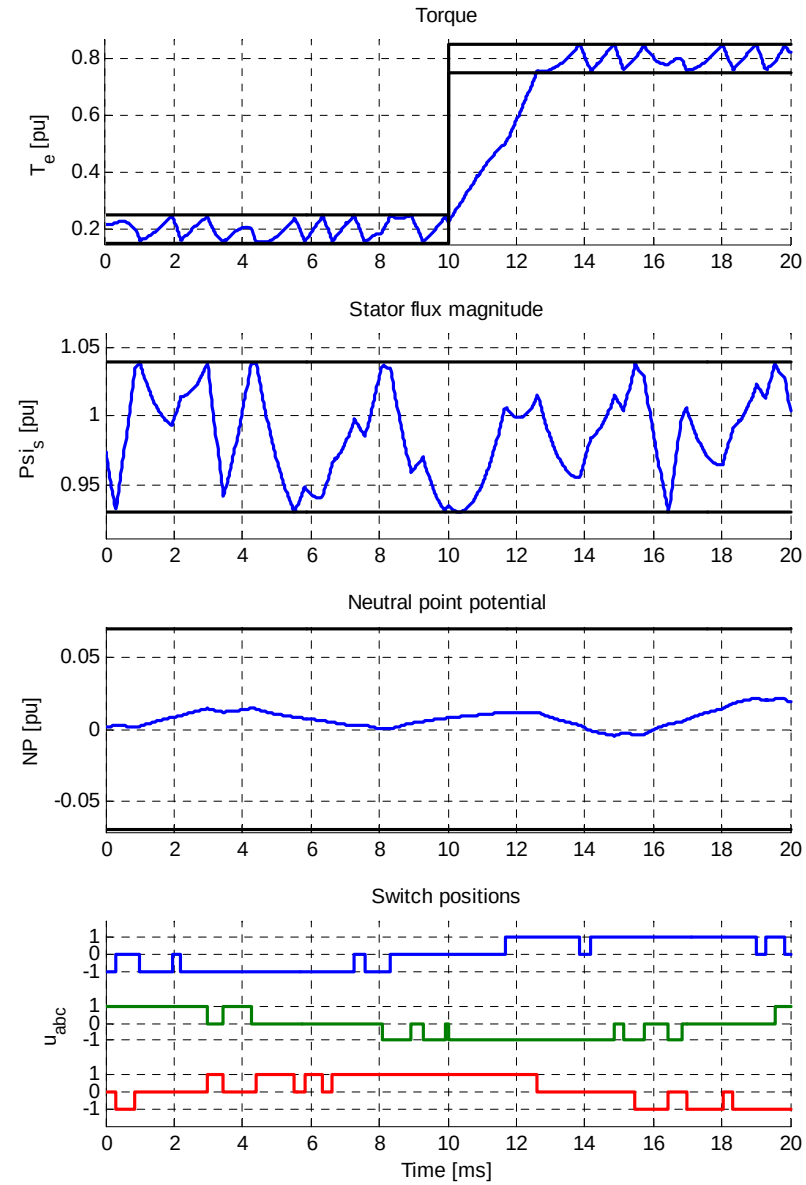

Control objectives:

- Keep **torque**, **stator flux** and **neutral point potential** within given bounds
- Minimize the **switching losses**

Control variable:

- Discrete inverter **switch positions**

Model Predictive Direct Torque Control

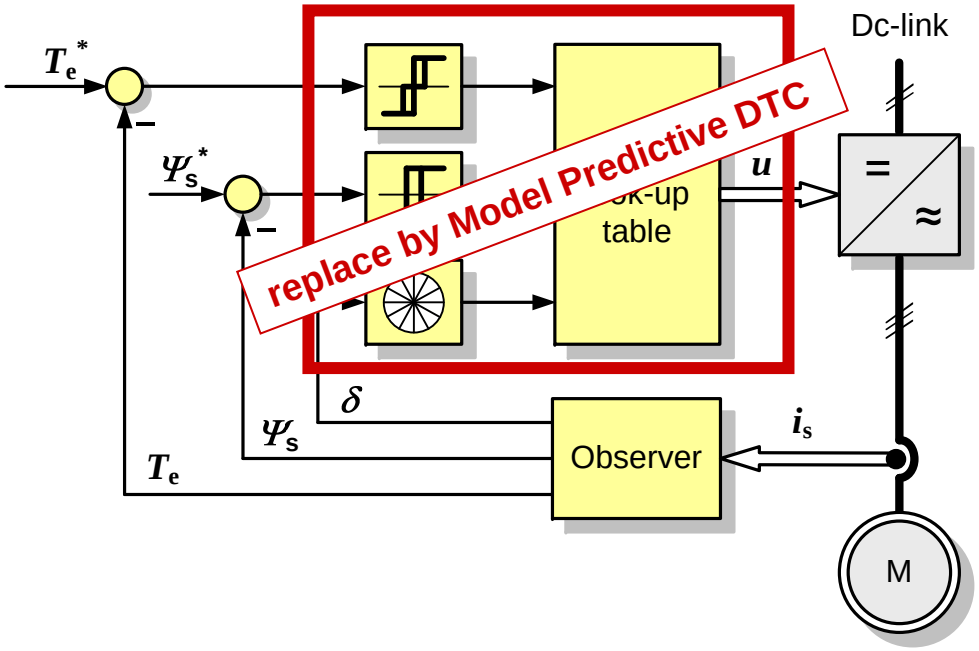

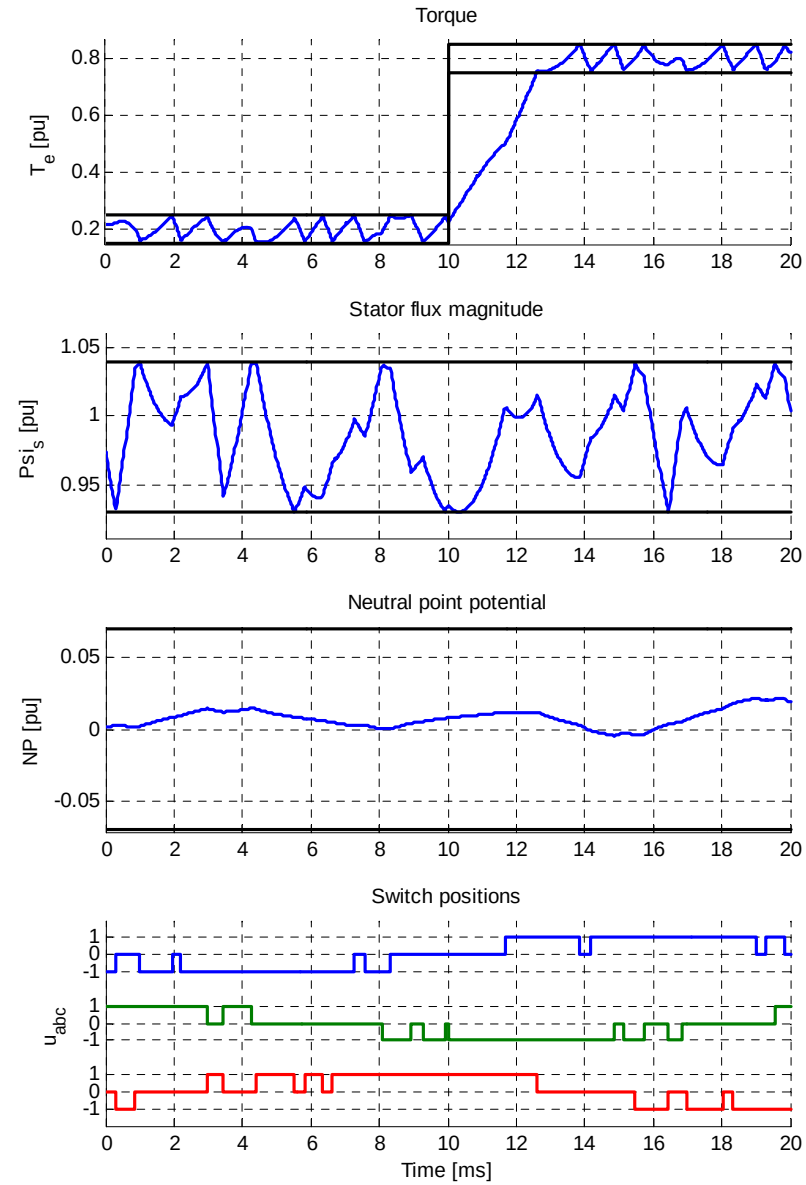

Challenging control problem:

- **Nonlinear**
- **Hybrid**
- MIMO
- Sampling interval T_s = 25us

Model Predictive Direct Torque Control

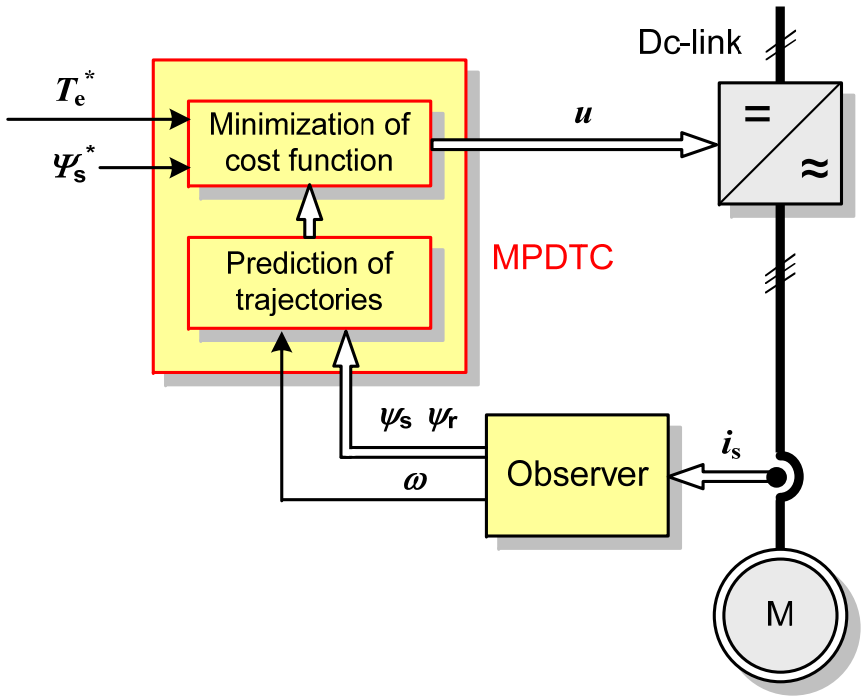

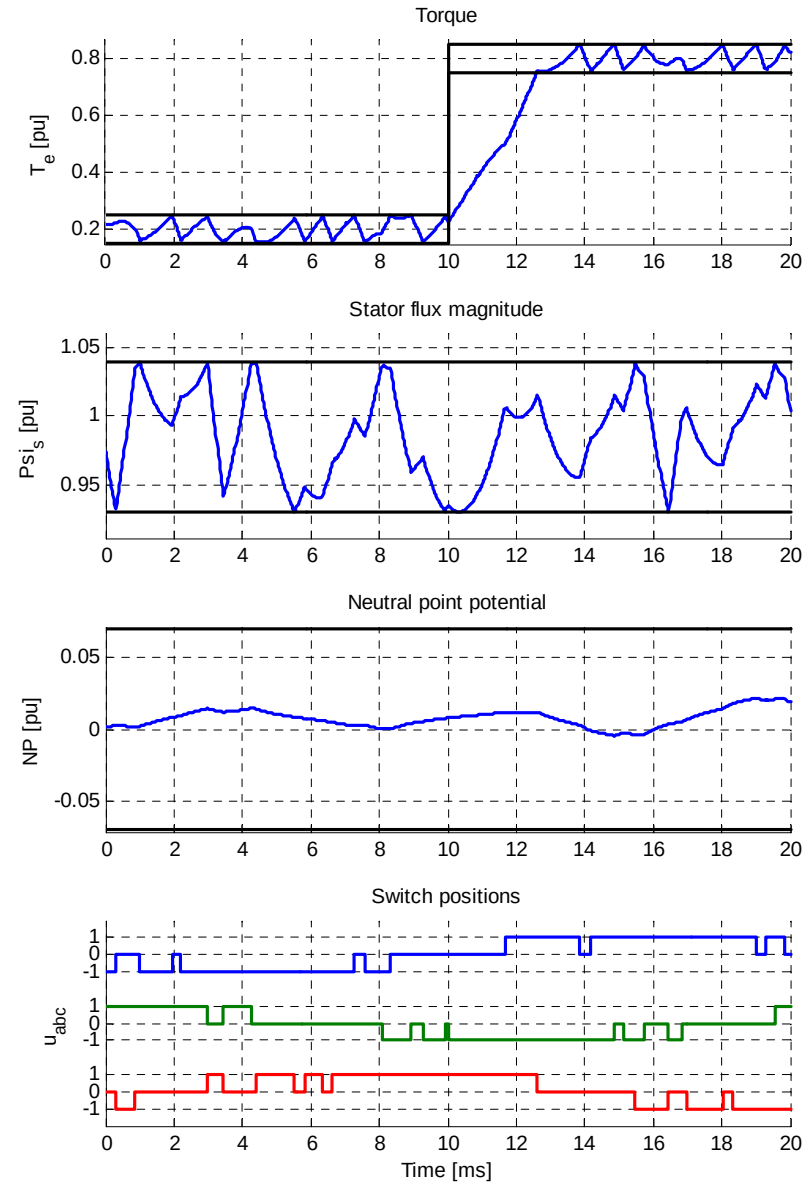

Model Predictive DTC: *Step 1*

EP, US & JP patent 2004
PhD thesis 2005
Trans. on Ind. Electronics 2009
CDC 2009

Predict output trajectories for (all) possible **switching sequences**

Key ingredients:

- Drive model
- Extrapolation

Switching horizon, e.g. '**eSESE**'

- **S**: consider all switch transitions
- **E**: extrapolate/extend torque, flux, NPP
- **e**: optional 'E'

Prediction horizon N_p

Typically 50..150 time-steps

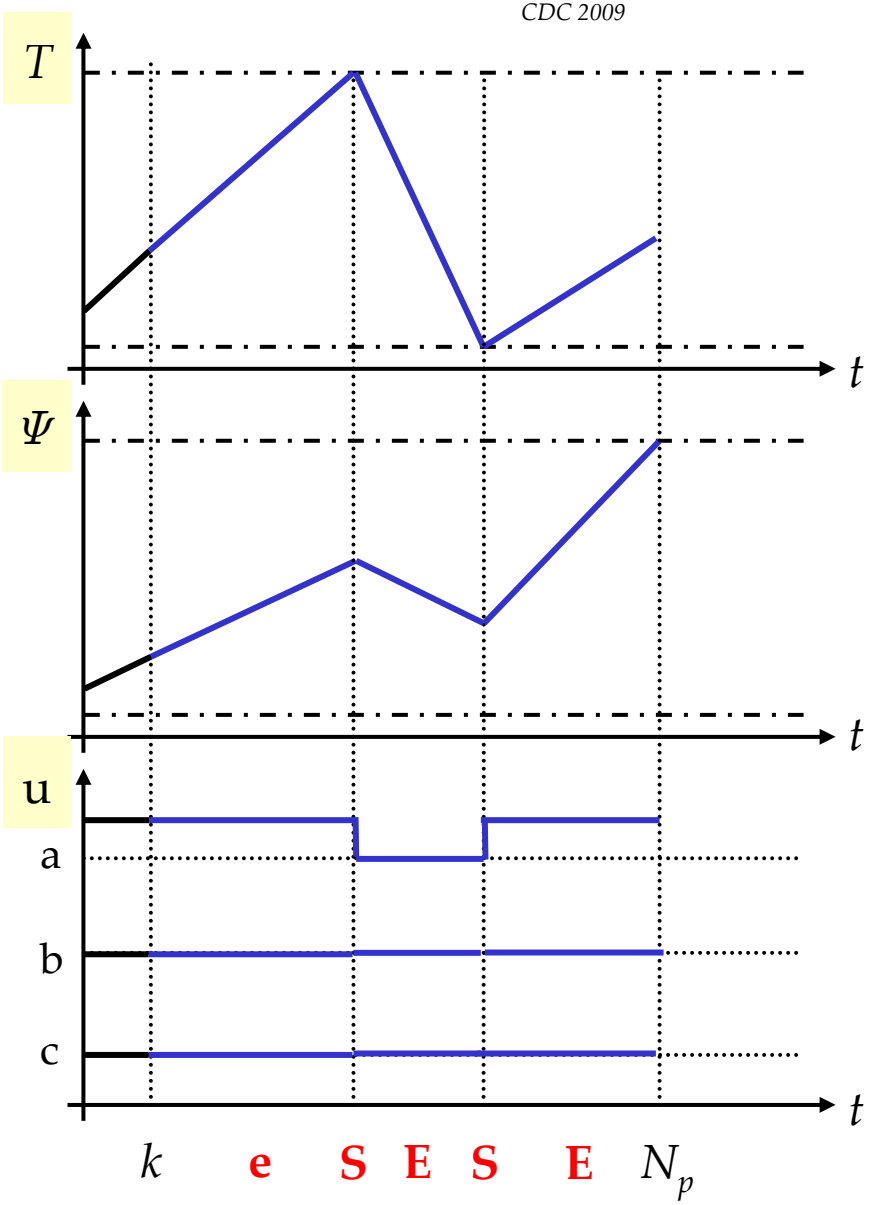

Model Predictive DTC: *Step 1*

EP, US & JP patent 2004
PhD thesis 2005
Trans. on Ind. Electronics 2009
CDC 2009

Predict output trajectories for (all) possible **switching sequences**

Key ingredients:

- Drive model
- Extrapolation

Switching horizon, e.g. '**eSESE**'

- **S**: consider all switch transitions
- **E**: extrapolate/extend torque, flux, NPP
- **e**: optional 'E'

Prediction horizon N_p

Typically 50..150 time-steps

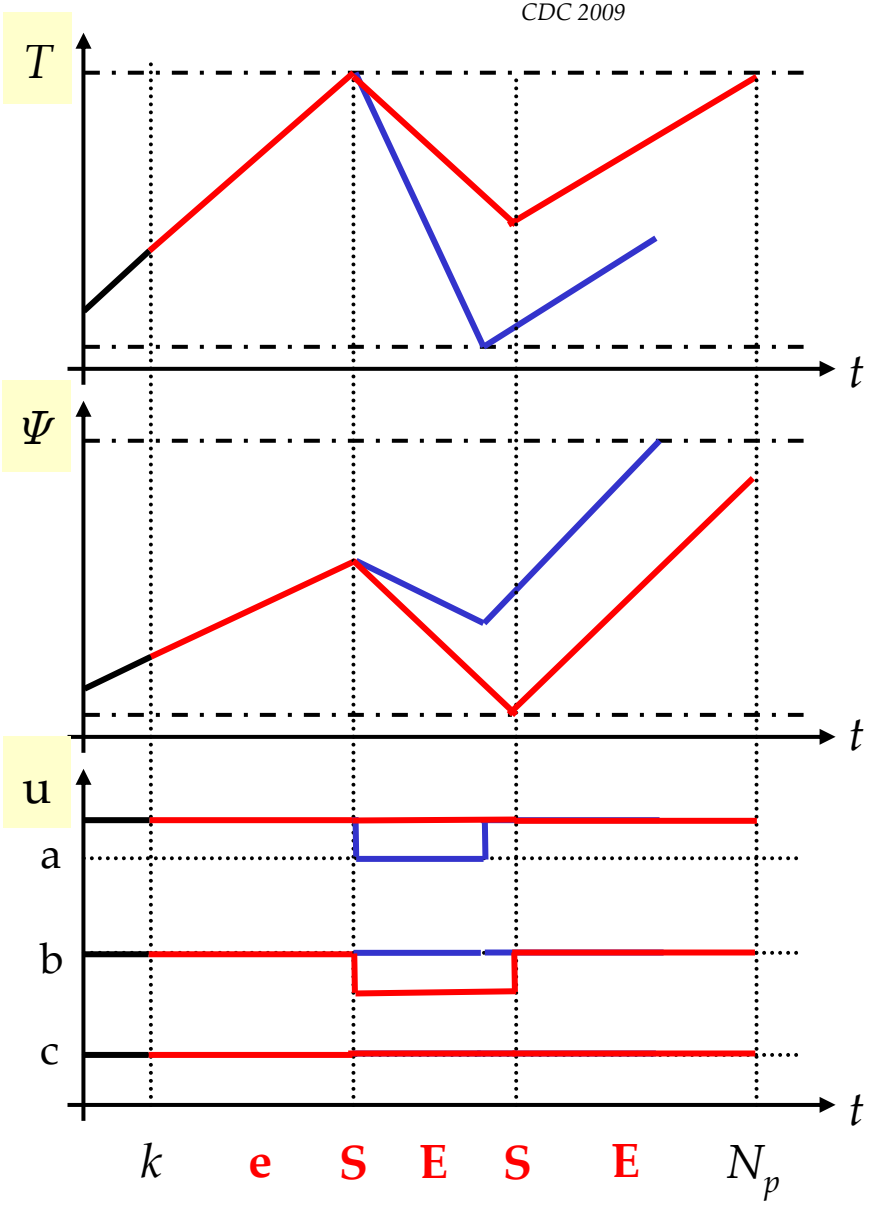

Model Predictive DTC: *Step 2*

EP, US & JP patent 2004
PhD thesis 2005
Trans. on Ind. Electronics 2009
CDC 2009

Evaluate and **minimize switching losses**

$$J^*(x) := \min_U \frac{1}{N_p} \sum_{k=0}^{N_p-1} E_{\text{loss}}(x_k, u_k)$$

=> Optimal **switching sequence** U

Apply only the **first element** of U

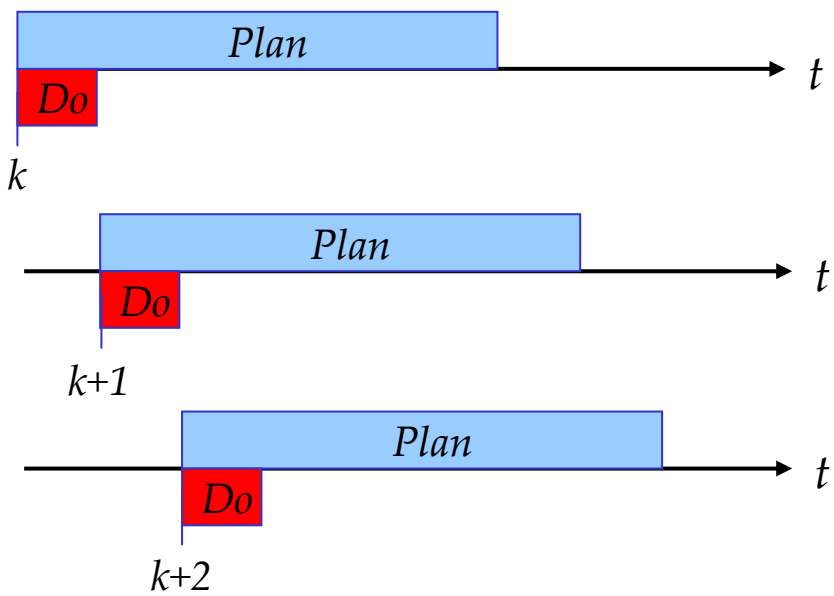

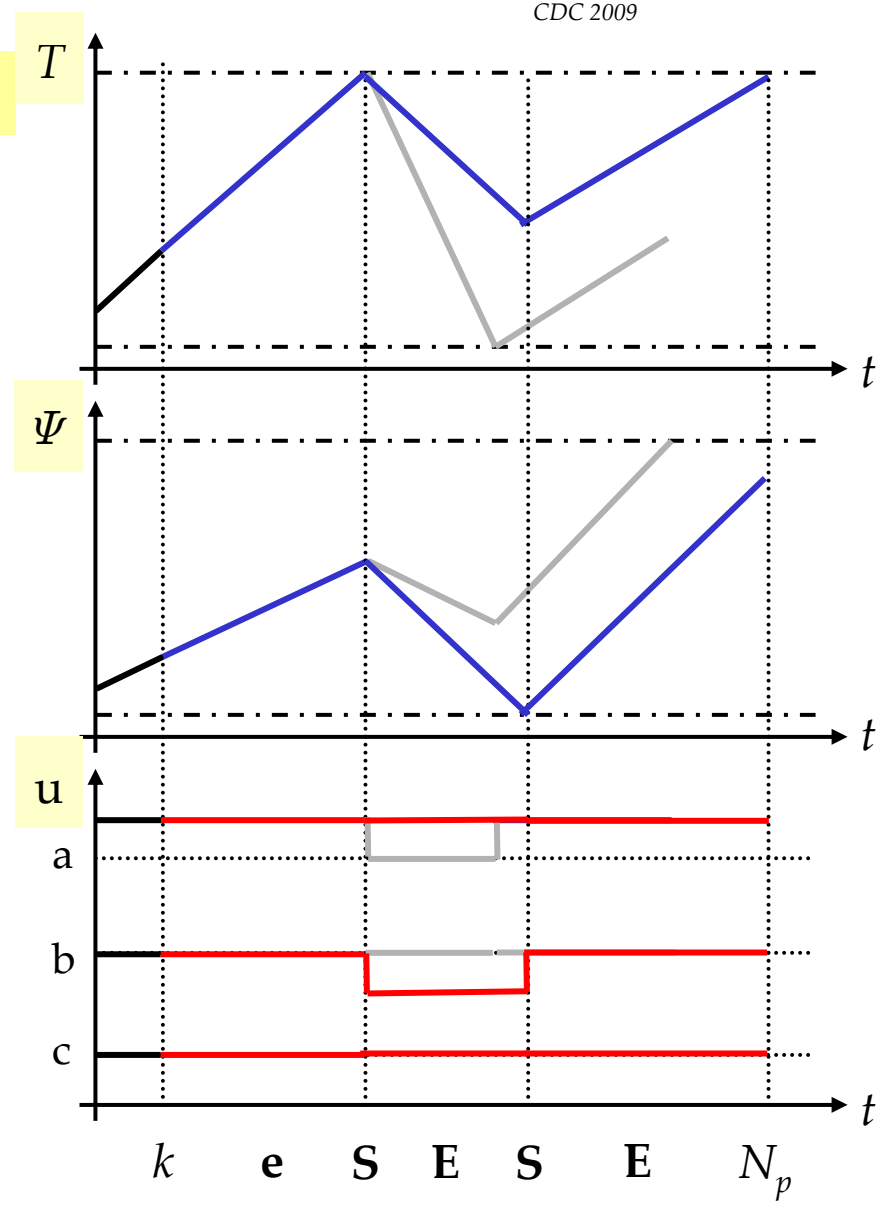

Model Predictive DTC Problem Formulation

Performance Index: $$J^*(x) := \min_U \underbrace{\frac{1}{N_p}\sum_{k=0}^{N_p-1} E_{\text{loss}}(x_k, u_k)}_{\text{Short-term avg. switching (power) losses}}$$

Constraints

$\forall k = 0, \ldots, N_p - 1$

$$\begin{cases} x_{k+1} = f(x_k, u_k), & \text{Model of machine and inverter} \\ y_k = g(x_k), & \text{Outputs (torque, flux and NP)} \\ y_k \in \mathcal{Y}, & \text{Bounds on torque, flux and NP} \\ u_k \in \{-1, 0, 1\}^3, & \text{Discrete-valued switch positions} \\ u_k \in \mathcal{U}(u_{k-1}) & \text{Restrictions on switch transitions} \end{cases}$$

Main features:

- short **switching** horizon but long **prediction** horizon
- **tailored** online solution approach
- bound width proportional to **THD**

Movie with Predictions

ACS 6000, w_e=0.6 pu, T_e=0.6 pu; MPDTC with 'eSSESE'

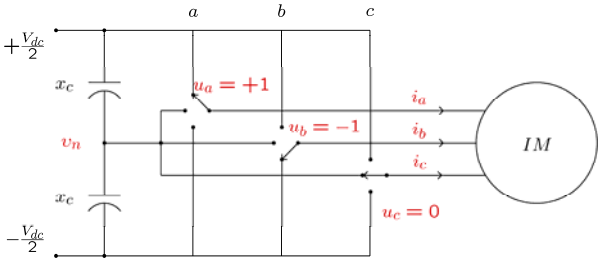

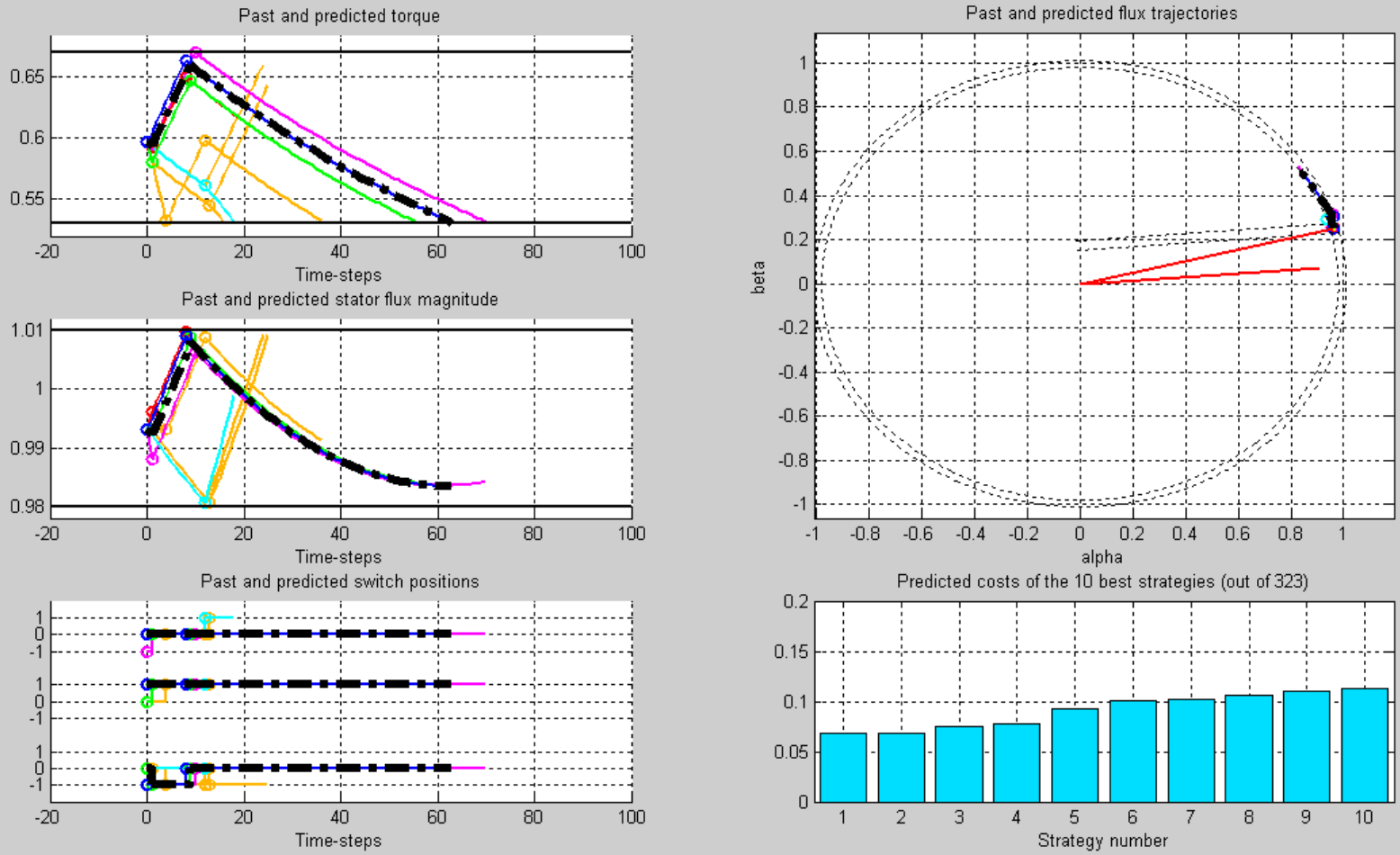

Comparison: DTC vs MPDTC

ACS 6000, w_e=0.6 pu, T_e=0.6 pu;
MPDTC with 'eSSESSE'
Same torque bounds, flux bounds relaxed by +/-0.01pu
ABB's simulation environment

DTC

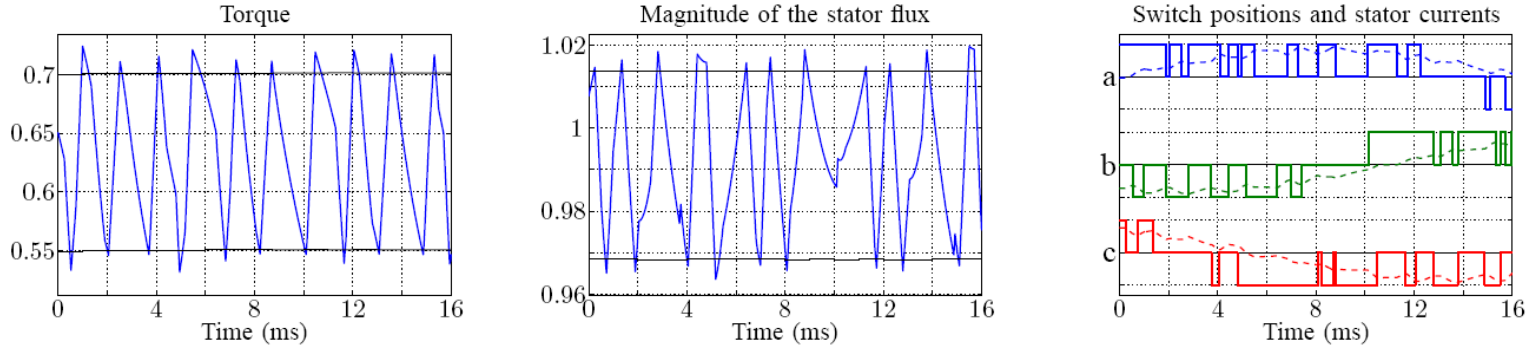

MPDTC

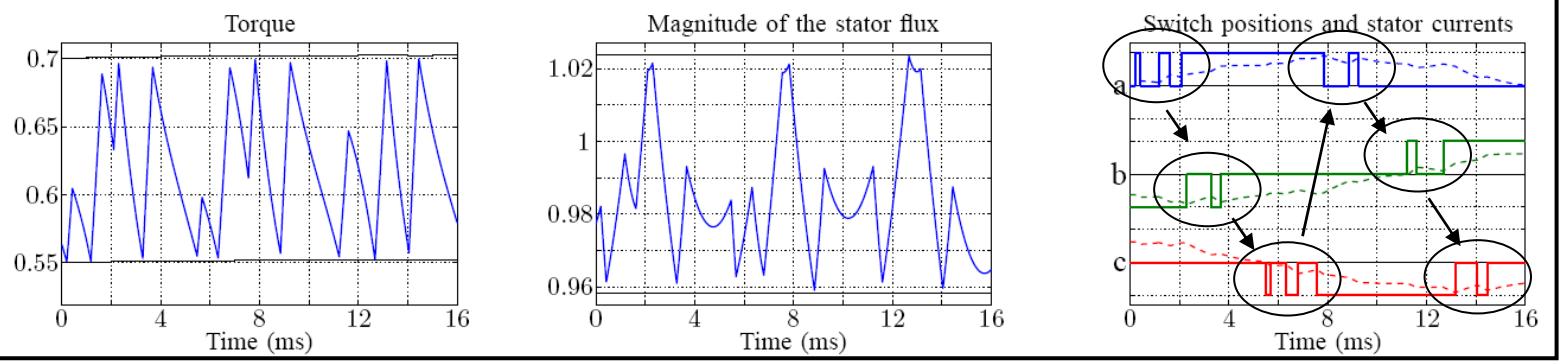

Comparison: DTC vs MPDTC

ACS 6000, w_e=0.6 pu, T_e=0.6 pu;
MPDTC with 'eSSESSE'
Same torque bounds, flux bounds relaxed by +/-0.01pu
ABB's simulation environment

DTC

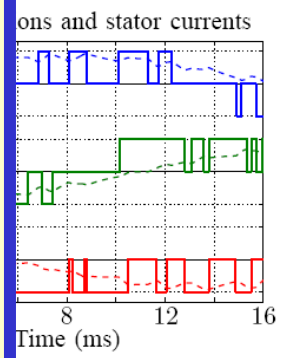

MPDTC

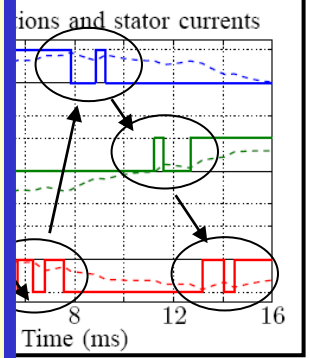

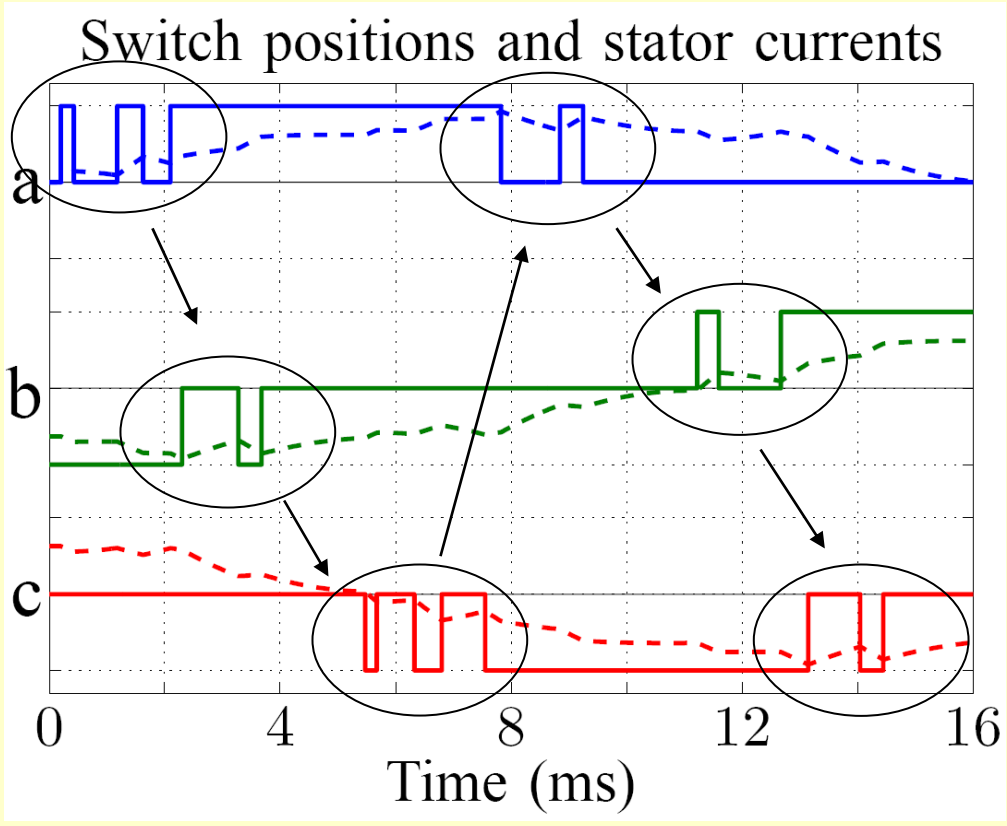

Results (compared to DTC):

- **60%** less **switching losses** and (!)
- **20%** less **torque distortions** (similar current distortions)

Model Predictive Direct Torque Control

Current THD vs switching losses

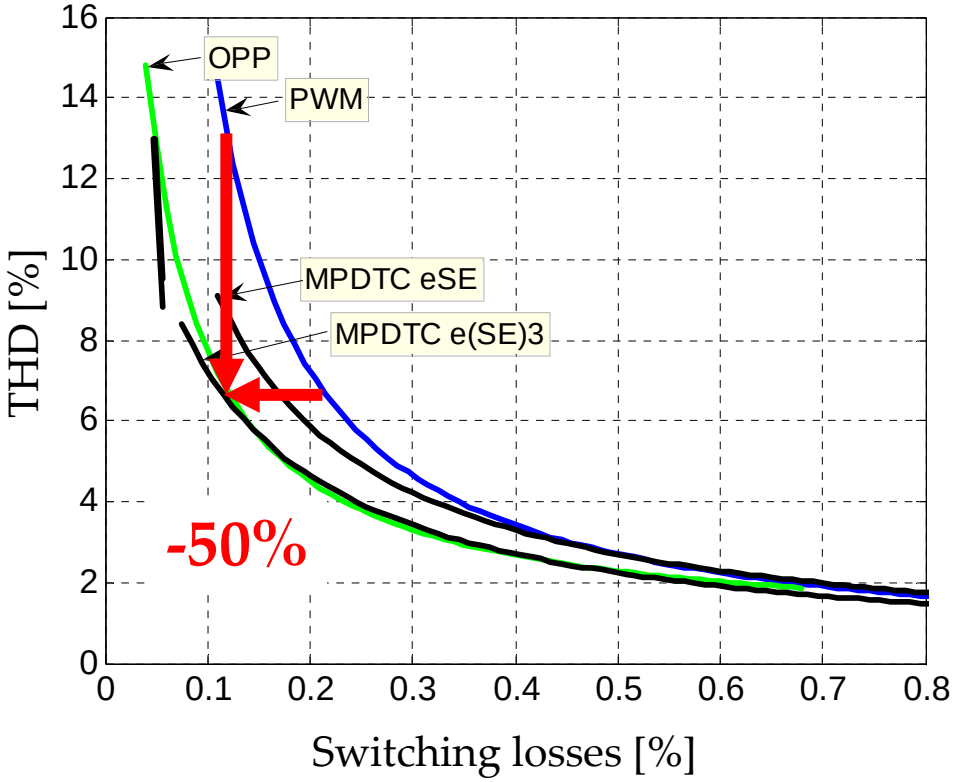

Torque THD vs switching losses

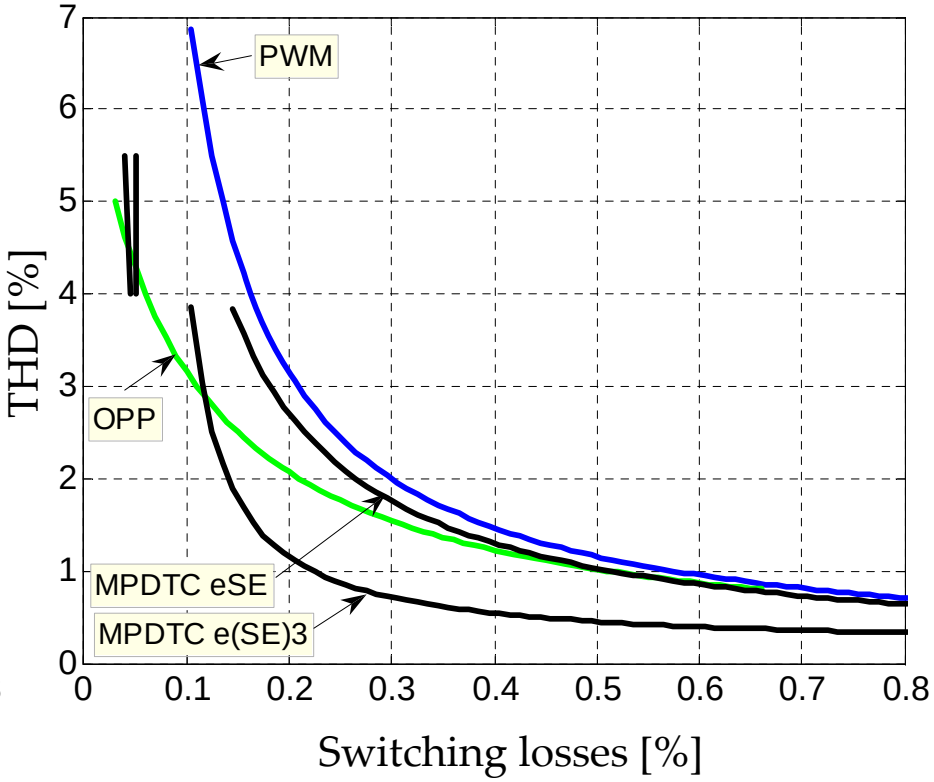

Long switching horizon eSESESE (50-150 steps):

- Current THD: similar to optimized pulse patterns (OPP)
- Torque THD: significantly better than OPP, but at the expense of current THD

Commercial Benefits

- Higher **rating** of inverter possible
  - **40%** higher power capability (e.g. from 5 MVA to 7 MVA)
  - Hardware remains the same
  - Software (control) allows company to greatly **increase margin**

- **Standard machines** can be used
  - **No derating** of machine required

Fully utilize the drive **hardware**

Experimental Results of MPDTC at 1MW

Trans. on Ind. Electronics 2009

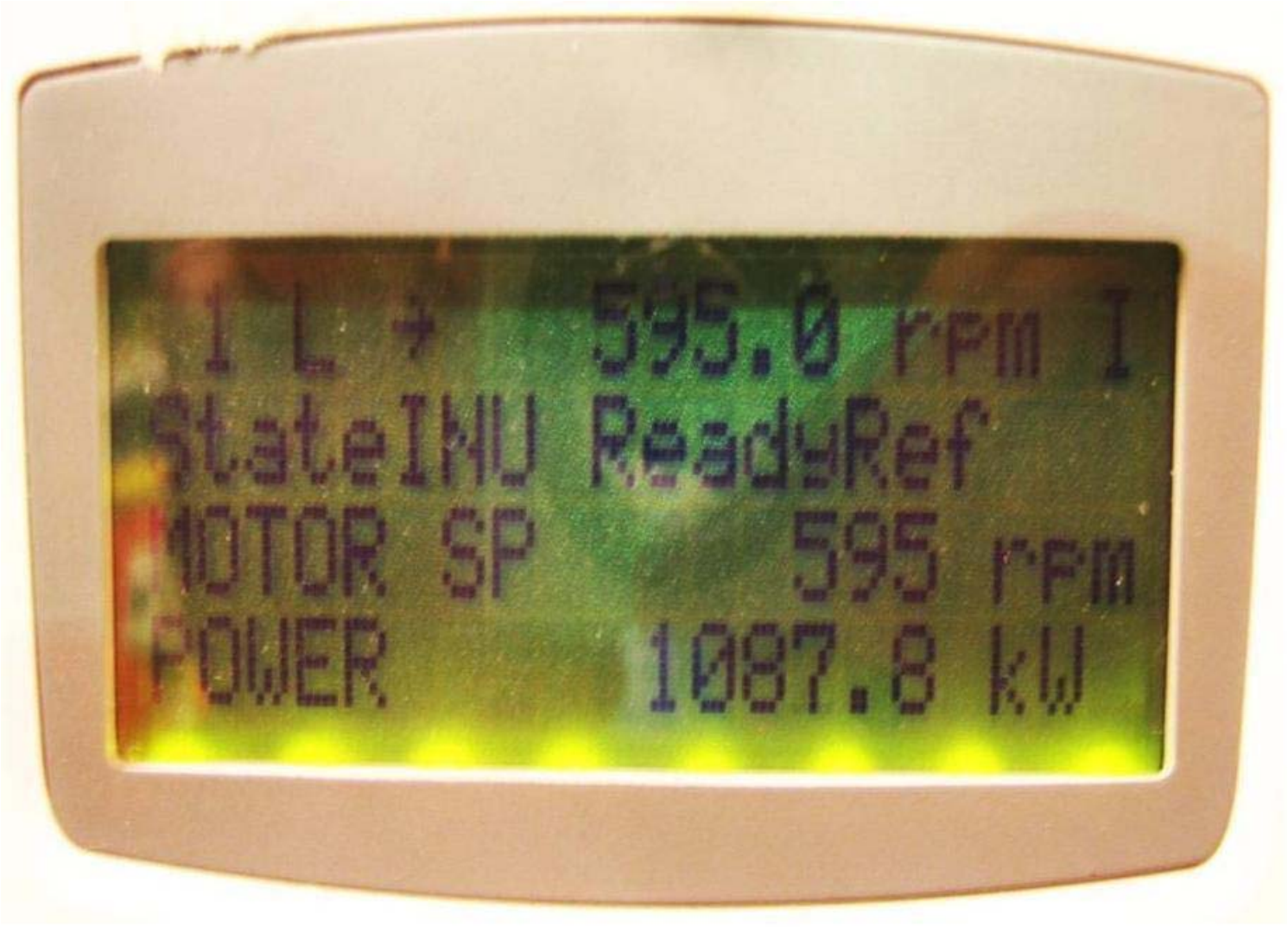

Courtesy of ABB Switzerland

ABB's new 5-level topology:

modern control is enabling technology

ABB's ACS 2000

Drive:
- 5-level aNPC inverter with induction machine
- Up to 1MVA, 6.9kV

Applications:
- **Retrofit**
- Direct-to-line grid connection (6.0-6.9kV)
- Large pumps, fans, compressors

Objectives:
- Low current and torque **distortions**
- Low **switching losses** in the inverter
- **Fast** torque and speed control

Solution Approach:
- Fast control based on **optimized pulse patterns**
- Predictive **balancing** (derivative of MPDTC)

Commercial Benefit:
- Only **viable** control scheme available so far
- **Product** release in a few months

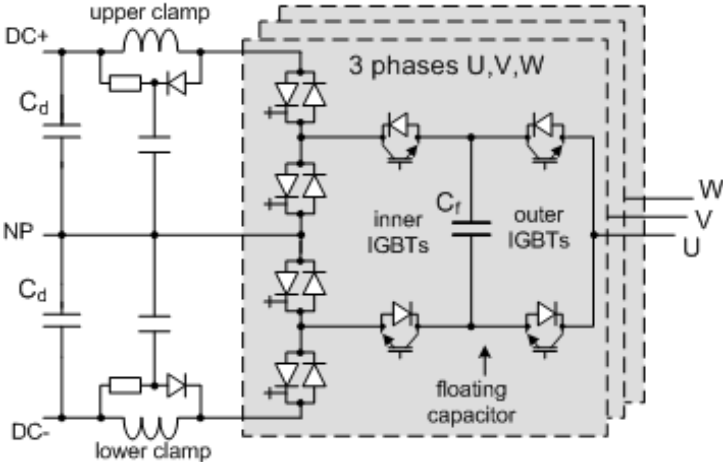

Control and Modulation Scheme

EP, US & JP patents 2010

$T_e^* \; \Psi_r^*$

$\Psi_s \; \Psi_r$

Upper Level:
Fast pred. control based on **optimized pulse patterns** of
- torque
- rotor flux magnitude

$V = [v_1 \; v_2 \; v_3]$
$t = [t_1 \; t_2 \; t_3]$

Sequence of phase voltages

v_{NP}

$v_1 \; v_2 \; v_3$

Lower Level:
Predictive balancing (derivative of **MPDTC**) of
- neutral point potential
- 3 phase capacitor voltages

$U = [u_1 \; u_2 \; u_3 \; u_4]$
$t = [t_1 \; t_2 \; t_3 \; t_4]$

Sequence of switch positions

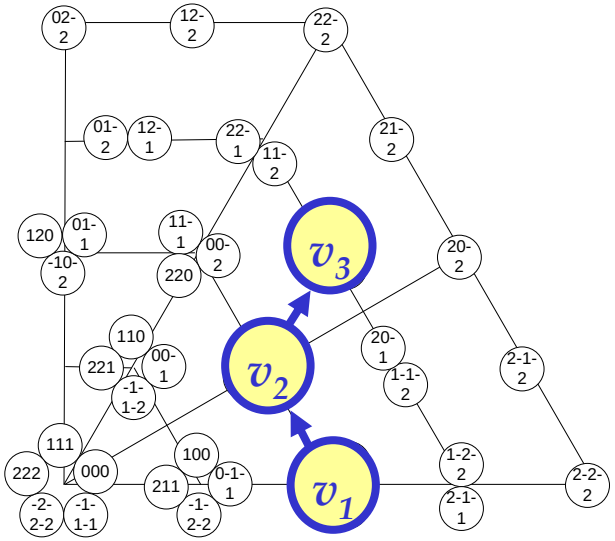

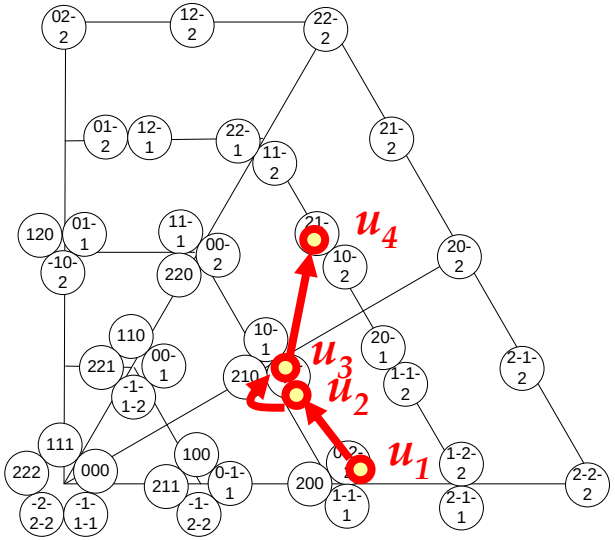

Movie with Predictions

ACS 2000 (5-level aNPC topology with flying phase capacitors);
w_e=0.8pu, T_e=1pu step to 0.5pu;
fast control based on OPP, predictive balancing with 'eSESE'

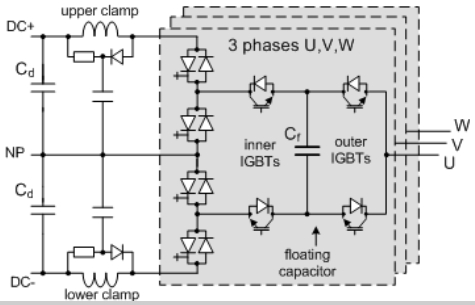

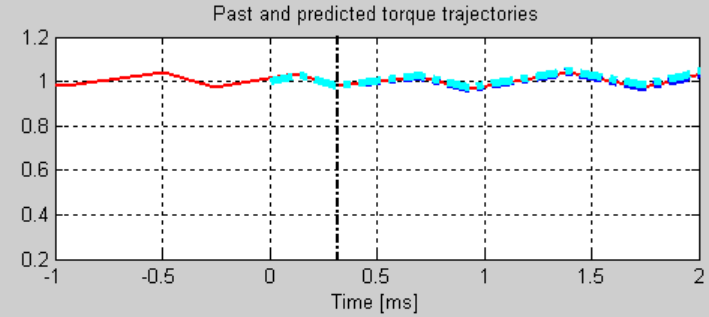

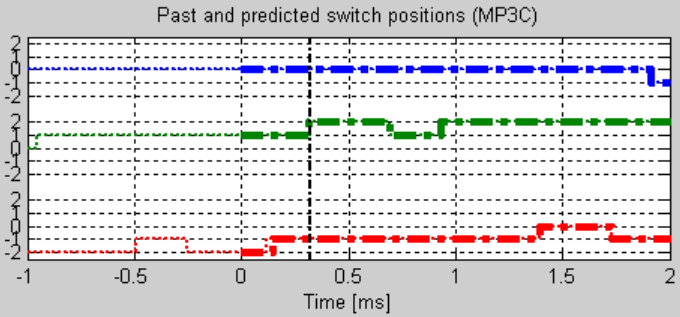

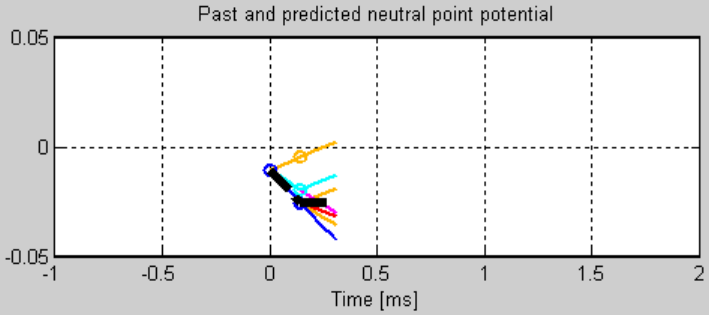

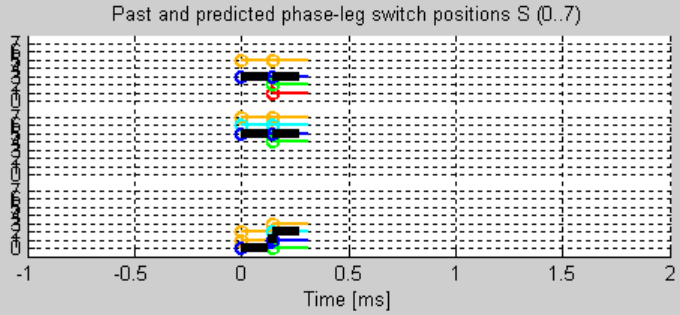

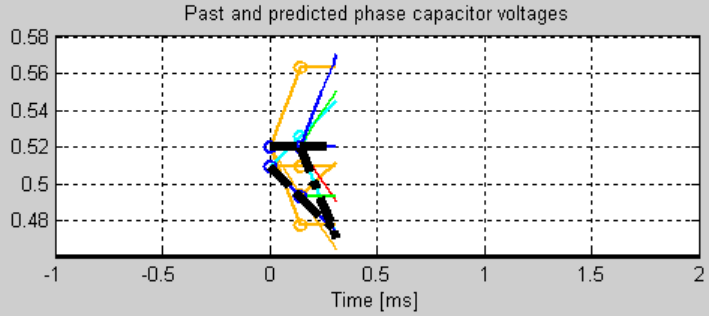

35 MW electrical drive:

maximizing the availability

GE's Steadfast 40

Drive:

- Up to 4 back-back 3-level NPC inverter
- Synchr. machine with brushless exciter
- Up to 35MW, 3.3kV

Applications:

- Large compressor trains (**LNG**)

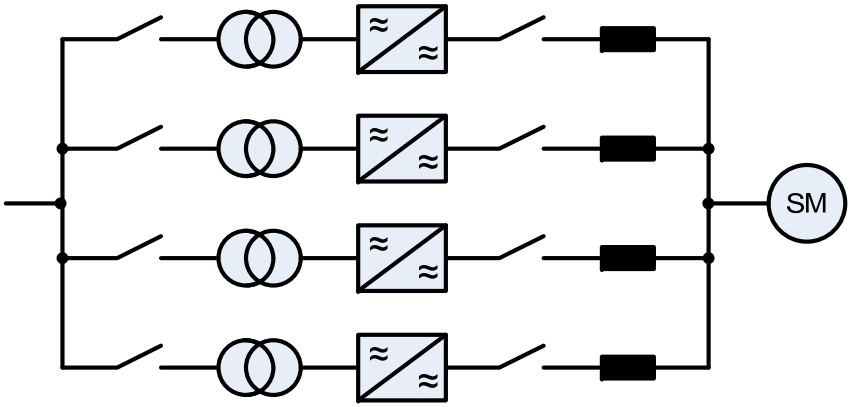

Electrification of LNG Compressor Trains

Gas turbine driven

Motor is starter only

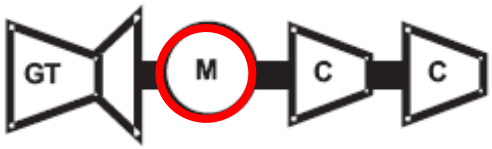

LNG super train

Motor is starter/helper

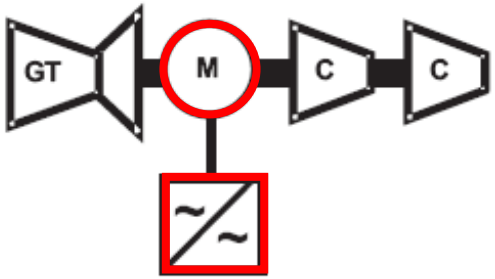

e-LNG

Redundant generators feed multiple motors

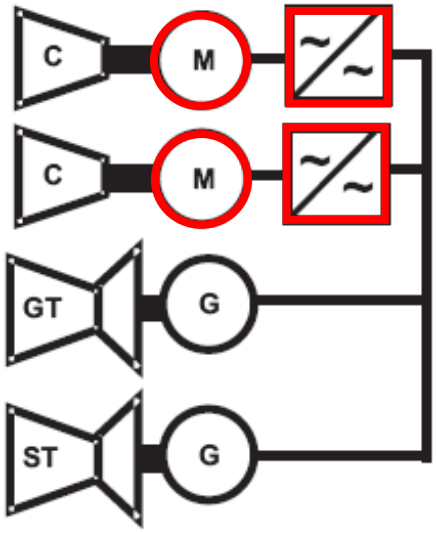

Main challenges:

- Very high power => parallel threads
- Torsional resonances / grid side harmonics => **interleaving**, active damping
- High reliability / availability => **fault-tolerance**

Interleaving of PWM carriers

Trans. on Ind. Appl. 2009
(best paper award)

Concept of Interleaving:

PWM carriers of converter threads are **phase-shifted** against each other

=> certain **harmonics** can be **cancelled**

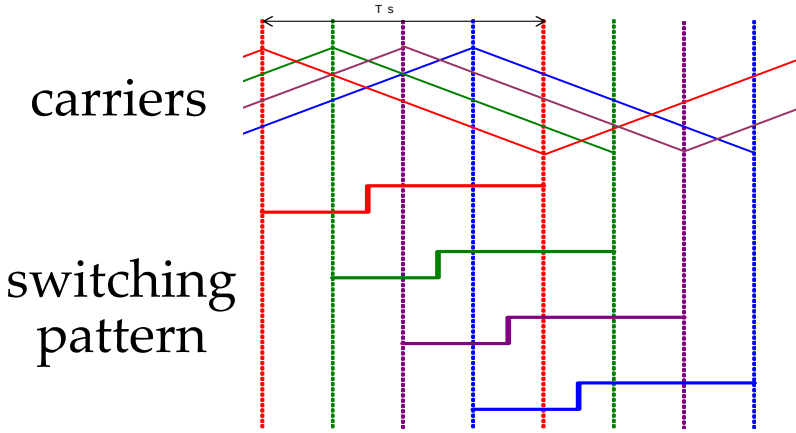

Interleaved & motoring operation

Non-interleaved & generating operation

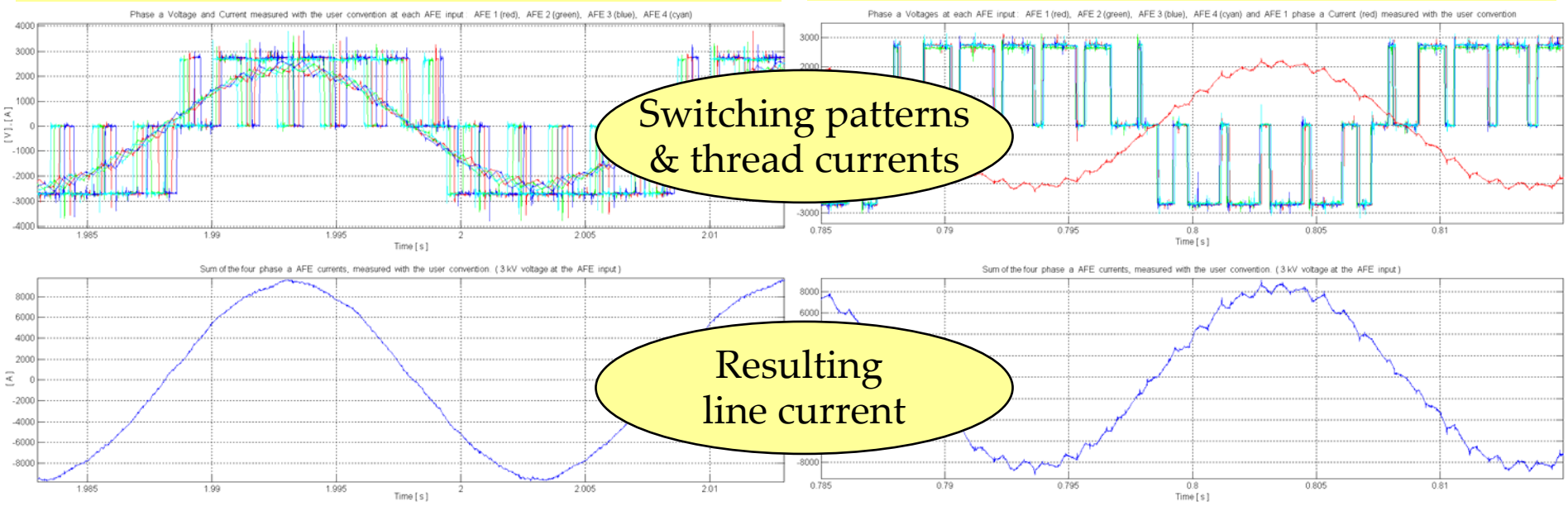

Reliability and Availability

ECCE 2009
Trans. on Ind. Appl. 2010

Thread exclusion scenario

Fault in Thread #1 (in drive with 3 threads)

=> Thread #1 is **isolated**, **shut down** and **repaired**

=> Threads #2 and #3 **ramp up** currents

Seamless transition into **degraded mode** operation

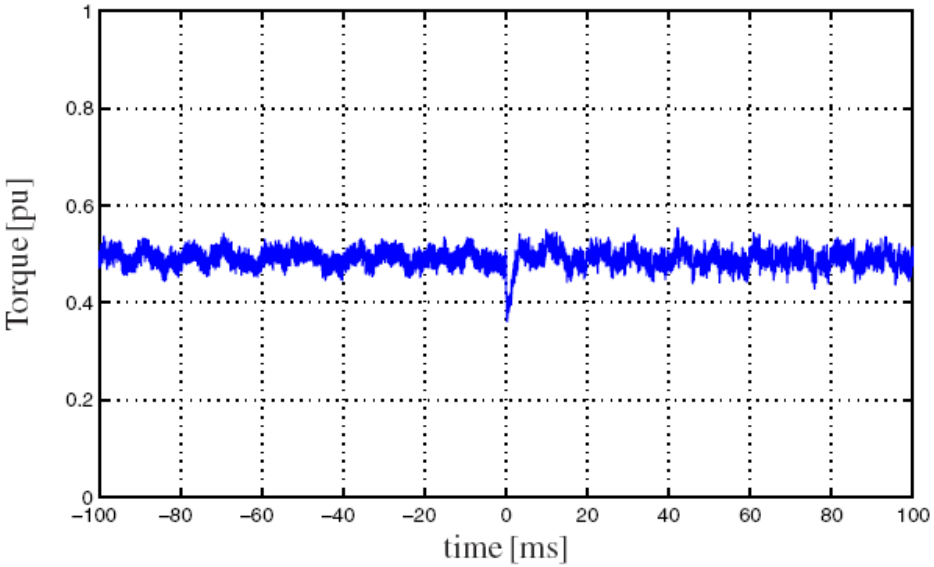

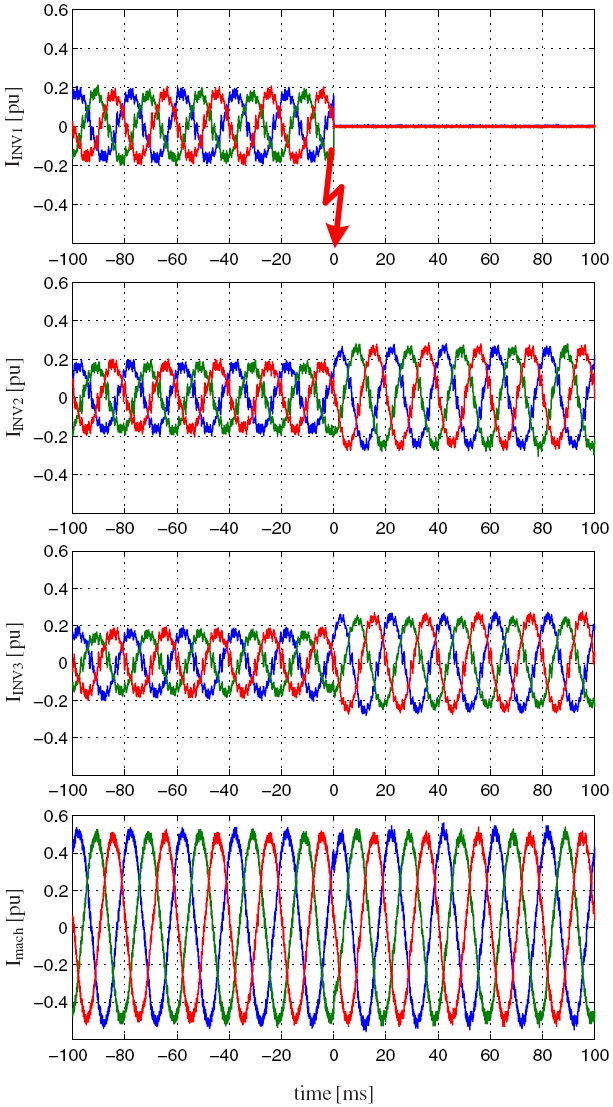

System availability of 99.98% (downtime < 2h/year)
Compare with 94% of Frame 7EA gas turbine

Conclusions and Outlook

Conclusions

- **Market** drivers for electrical drives include
  - **Wind** turbines => higher efficiency
  - **Electrification** => higher efficiency, higher availability
- Modern **control** and **modulation** schemes
  - **Fully utilize hardware** capability (reduce switching **losses** and **distortions**) => higher rating, use of standard machines, etc
  - Required for **complex** new **topologies** and drive configurations
- **Fault-tolerance** => higher reliability / availability

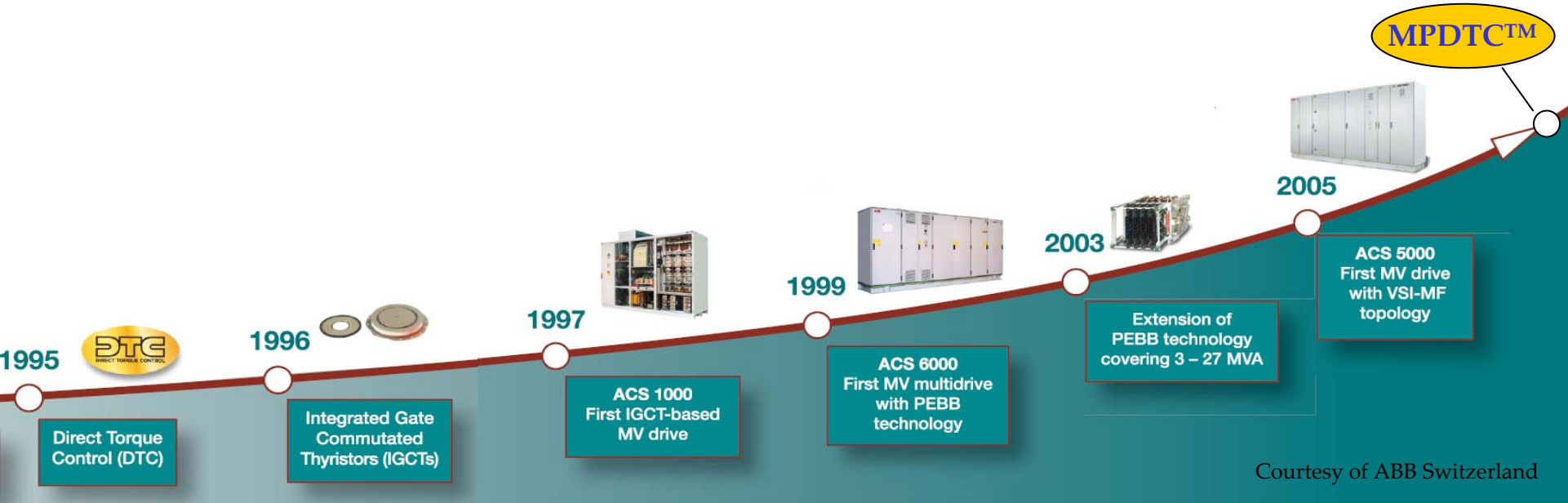

Courtesy of ABB Switzerland

Outlook

- **Grid-side** converters
  - Drives
  - Modular multi-level topologies
  - Power systems (FACTS, etc)
  - Power quality (AVC, UPS, etc)
  - HVDC light
  - MVDC grid, e.g. for offshore wind turbines

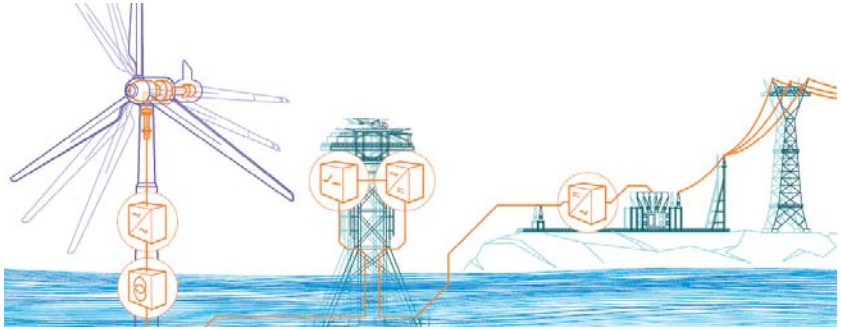

- Reliability / **availability**
  - Redundancy (device, converter, machine, control)
  - Fault tolerance

- **Electrification**
  - Train engines
  - Large drives for the Oil & Gas industry

- Low(er) power drives

Acknowledgments:

M. Morari, *ETH Zurich*

G. Papafotiou, Chr. Stulz, A. Paice, N. Oikonomou, G. Scheuer, P. Jörg, *ABB Switzerland*

J. Boys, G. Covic, U. Madawala, *Univ of Auckland*

S. Schröder, *General Electric*

For more information:

www.ece.auckland.ac.nz/tgey001

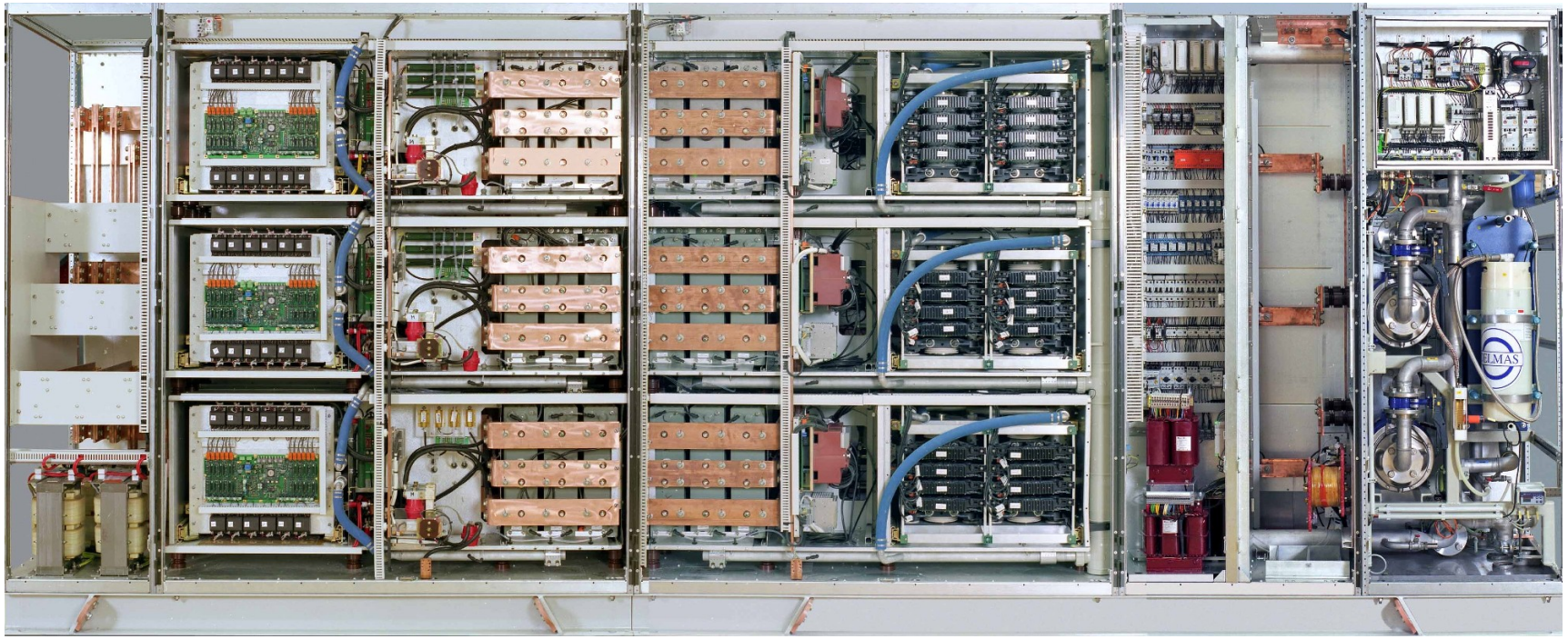

Backup

Evolution of the MPDxC Family

MPDTC with SE, SSE; min. of f_{sw}
EP, US, JP 2004
PhD thesis 2005
Trans on Ind El 2009

Implementation

Machine with LC-filter
EPE 2009

Test runs > 1MVA
Trans on Ind El 2009

MPDTC with long horizons and min. P_{sw}
CDC 2009

MPDCC for 2-level VSI
ICIT 2010

5-level VSI with high-speed machine
IECON 2009

PMSM
ECCE 2010

Computationally efficient MPDTC
ECCE 2010
Trans on Power El 2011
EP, US 2010

Benchmarking
ECCE 2010
Trans on Ind Appl 2011

MPDCC for multi-level VSI
ECCE 2010
Ind Appl Mag 2011

Trajectory ext. methods
MSc thesis 2010
APEC 2011
EP, US 2010

Deadlock avoidance
MSc thesis 2011

Ongoing:

5-level aNPC drive
Submitted to ECCE 2011

Predictive Balancing
Implemented, tests ongoing

Benchmarking
Submitted to ECCE 2011

Grid-side converter with LCL filter
PhD ongoing, first results submitted to ECCE 2011

Control of harmonics
IP filed

Analysis and stability
Submitted to ECCE 2011

Modular multi-level converter
PhD recently started

Search Tree

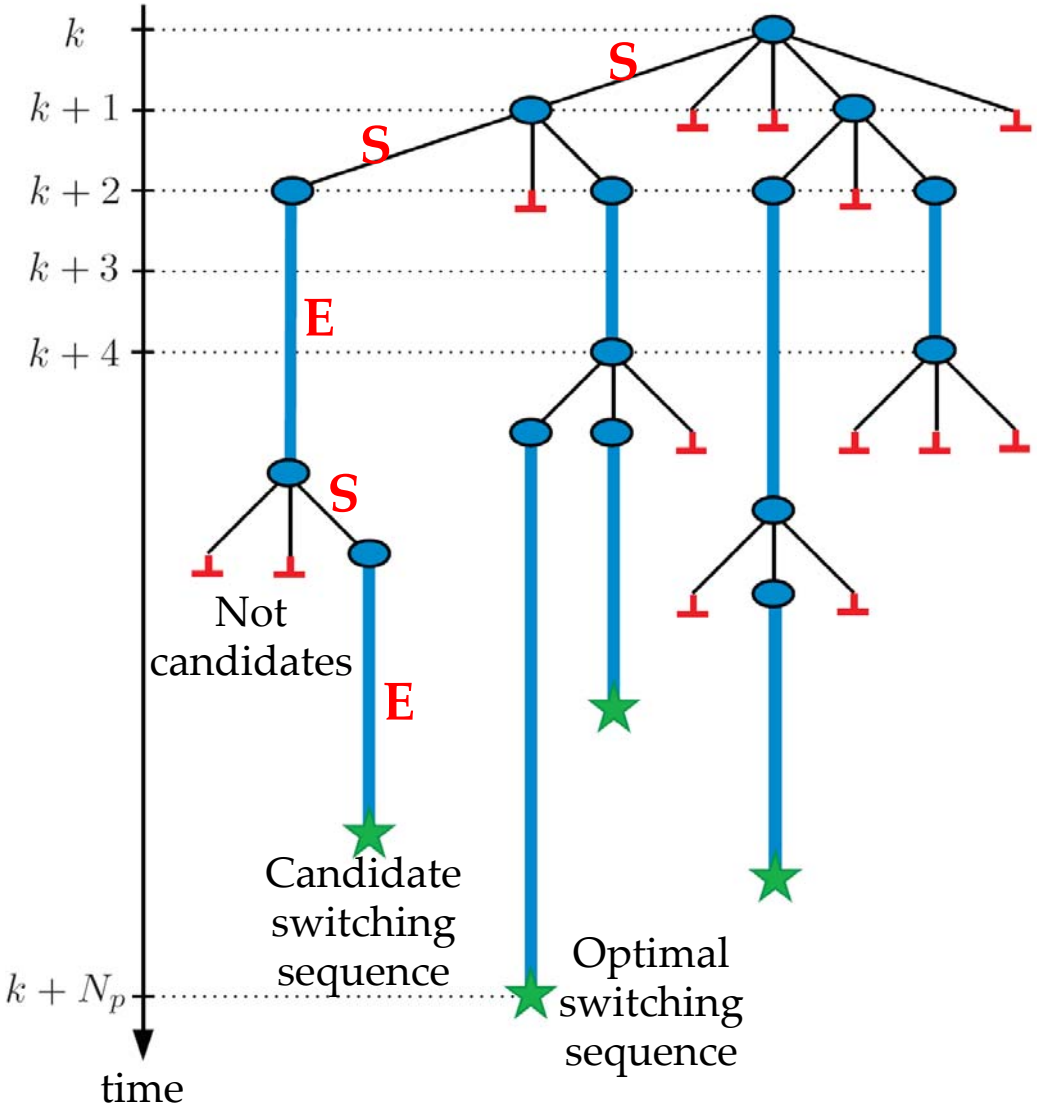

Search tree induced by optimization problem

So far: full enumeration

Search Tree

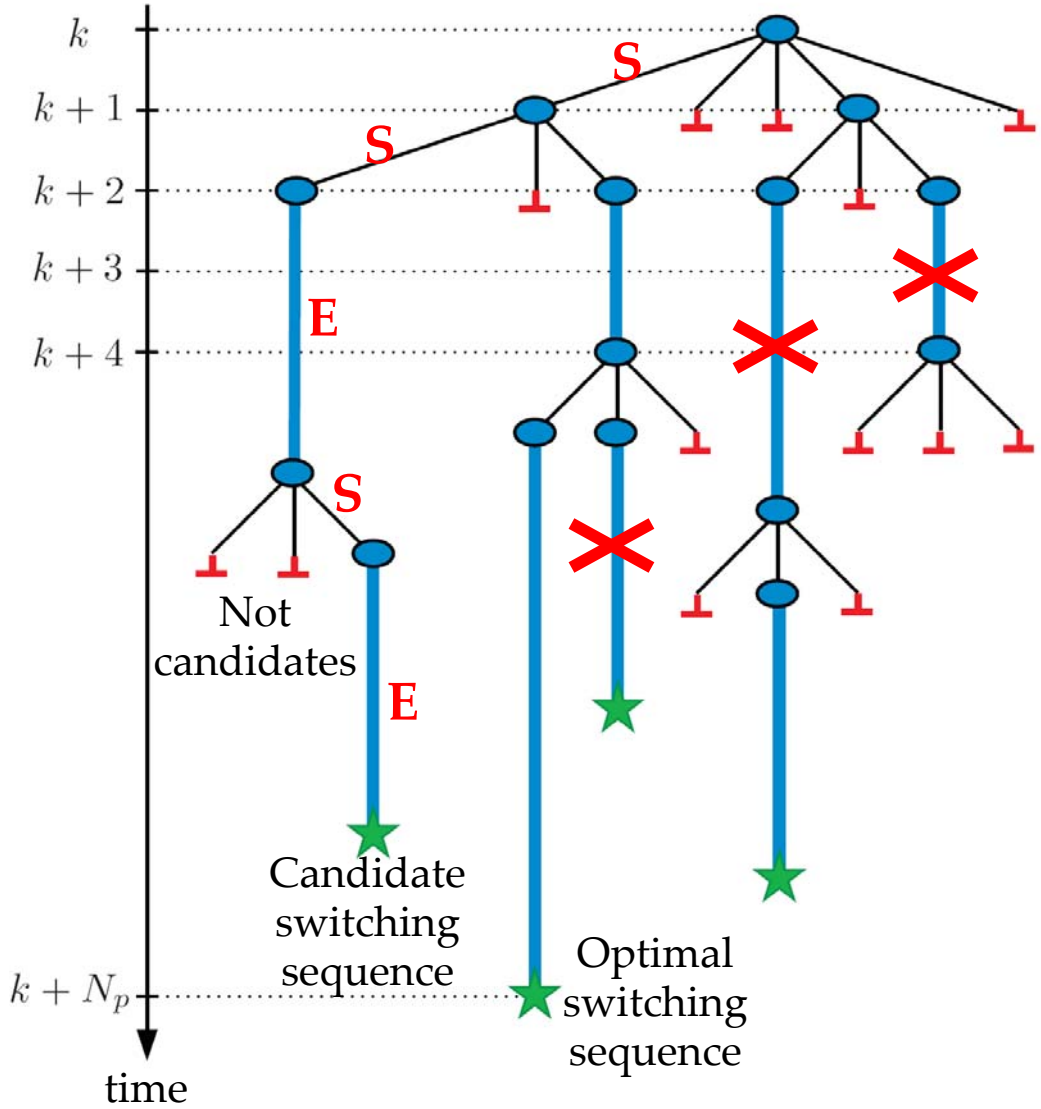

Search tree induced by optimization problem

So far: full enumeration

Approaches to reduce **computation time**?

- More efficient **implementation** of algorithm
- More efficient **extension** / extrapolation step
- Reduce number of nodes explored in search tree by using **Branch & Bound**

Evolution of the Optimal Cost during Optimization

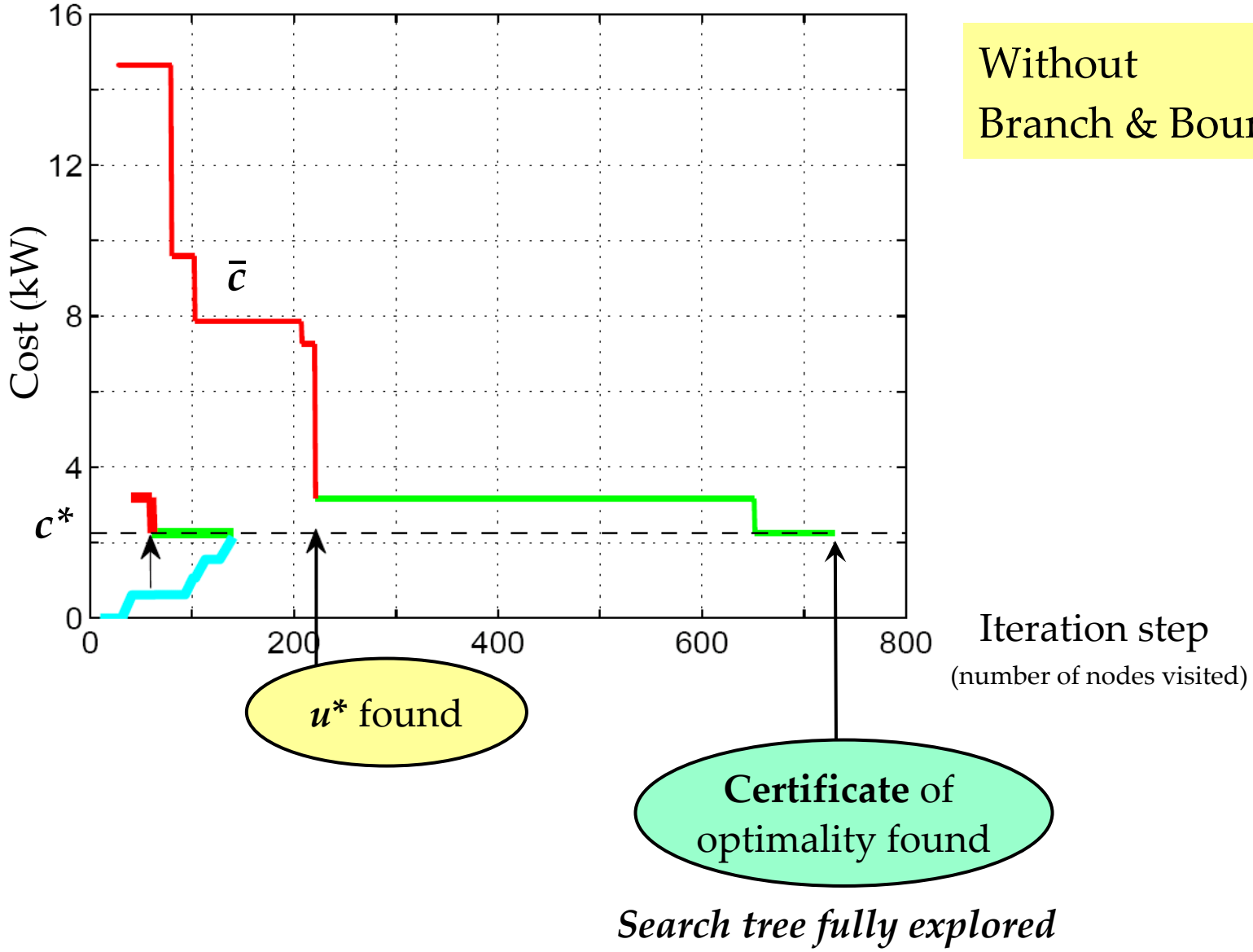

Search tree fully explored

Evolution of the Optimal Cost during Optimization

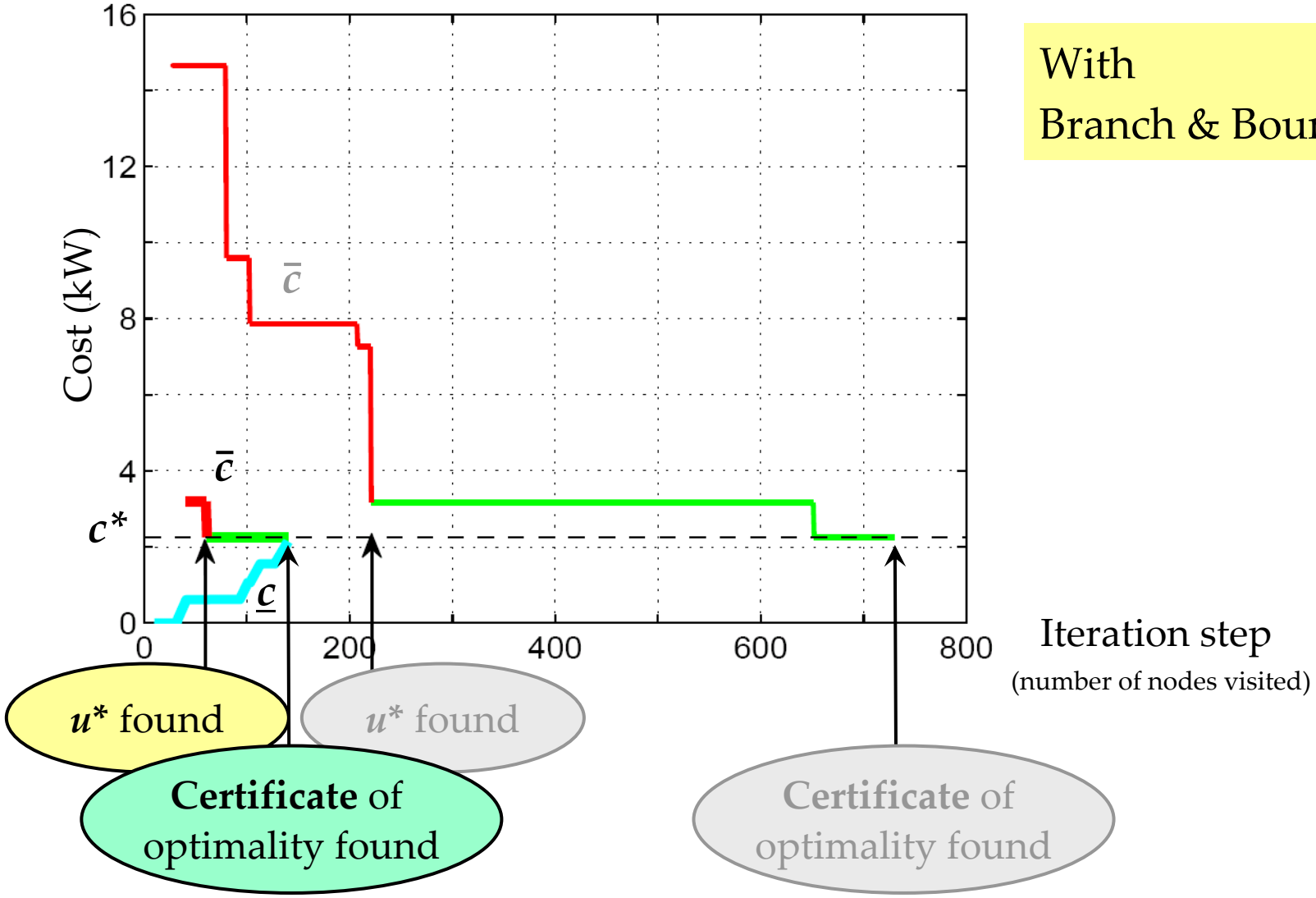

With
Branch & Bound

Computational Effort

Example: MPDTC with the switching horizon ’eSSESESE’

Probability distributions:

Number of nodes required to be explored to obtain the **optimal cost** c^*